PLUMAS COUNTY PRE-DESIGNED ADU

PERMIT APPLICATION SET

workbench
189 WALNUT AVENUE
SANTA CRUZ, CA 95060
WORKBENCHBUILT.COM
P: 831.227.2217

PLUMAS COUNTY PRE-DESIGNED ADU PROGRAM

In an effort to streamline the ADU-building process, Plumas County has developed four Pre-Designed ADU plans, made available to homeowners for their use. In order for a building permit to be issued, these pre-designed plans shall be submitted to the Plumas Building Department for each project, and will have an expedited review process.

The program includes four floorplans and four exterior architectural styles- "Summit", "Lakeside", "Goldrush" and "Meadow". Floorplans available are: Plan A -Starter One Bedroom ADU (705 GSF), Plan B - Larger One Bedroom ADU (830 GSF), Plan C-Two Bedroom ADU (990 GSF), and Plan D-Three Bedroom ADU (1200 GSF).

Foundations for each ADU are designed as typical slab on grade with monolithic footings per CRC/CBC presumptive soils values. Any project site that does not meet the conditions described will need to seek a soils report for their individual site and develop a custom foundation plan.

This program was funded using an SB2 Planning Grant from the California Department of Housing and Community development (HCD), which provides funding and technical assistance to help local jurisdictions prepare, adopt, and implement plans and process improvements that streamline housing approvals and accelerate housing production.

HOW TO USE THIS PLAN SET

Included within this plan set are a range of pre-designed architectural styles and exterior materials options, allowing Plumas County homeowners to customize their ADU to best fit their needs.

This plan set is considered "Pre-Designed" and does not include unique project or property-specific information. This plan set is intended to be used as-designed, without modification.

To complete the drawing set, project-specific information must be provided by the property owner/applicant. All applicant-provided information will be entered on Sheets G0.0 and G0.1.

In order to receive a building permit, applicants will need to submit a full application for review by the Planning and Building Departments. This will include the Pre-Designed ADU Plan Set, an Administrative Permit Application, a Building Permit Application, and any other supplementary application materials that may be required based on their specific property and project. Refer to the County of Plumas Planning Department for your specific project requirements.

The Architectural and Electrical Plans for each exterior design style are self-contained within their own sheets. The contractor will reference the sheets for the chosen exterior option during construction. Reference the Project Checklist on Sheet G0.0 for specific direction.

The Structural Plans, Architectural Details, Architectural Schedules (door, window, and fixture), Mechanical Plans, and Plumbing Plans are shared across exterior design styles and are contained on specific sheets for these purposes. These sheets will be referenced for all projects.

HOW TO ENTER PROJECT-SPECIFIC INFORMATION and APPLY FOR YOUR BUILDING PERMIT

1. Enter PROJECT INFORMATION and a VICINTY MAP in the space provided on Sheet G0.0 and G0.1.
2. Review the drawing set and choose your architectural/exterior design style. Mark your selected options on the PROJECT CHECKLIST on Sheet G0.0.
3. Create your site plan showing where your ADU will be located on your property. Detailed instructions and space for your site plan are provided on Sheet G0.1.
4. Submit your application using the instructions on the County of Plumas website.
5. A County of Plumas employee will contact you to discuss fees and project specifics.

ADDIT'L REVIEW

PLANNING DEPARTMENT

PARKING

ENVIRONMENTAL HEALTH DEPARTMENT

PROPERTIES SERVED BY SEPTIC SYSTEM (CAPACITY)
PROPERTIES SERVED BY WELL

BUILDING DEPARTMENT

PROPERTIES REQUIRING SOILS REPORT
PROPERTIES REQUIRING CUSTOM-ENGINEERED FOUNDATION

DEFERRED SUBMITTALS

PHOTOVOLTAIC SYSTEM, WHEN REQUIRED

FIRE SPRINKLERS (WHERE REQUIRED - REFER TO BUILDING DEPT.)

PROJECT DIRECTORY

ARCHITECT	STRUCTURAL ENGINEER	MECH/PLUMBING ENGINEER
WORKBENCH 189 Walnut Avenue Santa Cruz, CA 95060 831.227.2217 info@workbenchbuilt.com	CM TAYLOR STRUCTURAL ENGINEERING, INC 4245 Capitola Rd, Suite #204 Capitola, CA 95010 831.854.2484 contact@cmtaylorse.com	ZAL ENGINEERING 99 Pacific St, Suite #375G Monterey, CA 93940 831.641.7739 contact@zalengineering.com

PROJECT INFORMATION

OWNER/APPLICANT: ENTER INFORMATION IN THE PROVIDED SPACE

PARCEL INFORMATION	
APN	
STREET ADDRESS	
CITY, STATE, ZIP	
LOT SIZE (in SF or ACRES)	
PRIMARY DWELLING SIZE	*The size of the existing primary dwelling in Square Feet*
DETACHED GARAGE SIZE	*The size of existing detached garage or other accessory structure in Square Feet. If none exists, enter 0.*
PROPOSED ADU SIZE	990 GSF
WILDFIRE REBUILD	☐ YES ☐ NO *Check* ☐ PRIMARY DWELLING ☐ ADU
PARCEL WITHIN FEMA SPECIAL FLOOD HAZARD AREA (SFHA)?	☐ YES ☐ NO *100-YEAR FLOODPLAIN*
PROJECT INFORMATION	
OCCUPANCY GROUP - R3	TYPE OF CONSTRUCTION - STANDARD/TYPE V-B
MAIN RESIDENCE HAS FIRE SPRINKLERS	☐ YES ☐ NO
PROPERTY OWNER	
NAME	
ADDRESS	
CITY, STATE, ZIP	
PHONE/EMAIL	
PROJECT CONTRACTOR	
NAME	
ADDRESS	
CITY, STATE, ZIP	
PHONE/EMAIL	

PROJECT CHECKLIST-C

CLEARLY MARK THE BOX FOR EACH SELECTION

ARCHITECTURAL STYLE (SELECT ONE, INCLUDE SUB-SELECTIONS)	
☐ SUMMIT ☐ HORIZONTAL CEDAR SIDING ☐ HORIZONTAL FIBER CEMENT SIDING ☐ STANDING SEAM METAL ROOF ☐ ASPHALT SHINGLE ROOF	*For this option, use the listed sheets and details:* Architectural: A1.0, A1.1, A1.2, A5.0, A5.1, A5.2, A5.3, A5.4, A6.0 Wall Assembly Details: A5.0 - TYPE E1 Structural: S0.0, S0.1, S1.0C, S2.0, S2.1, S2.2, S2.3 Mechanical/Plumbing: MP0.1, MP0.2, MP2.3 T24: T24.17, T24.18
☐ LAKESIDE ☐ STANDING SEAM METAL ROOF ☐ ASPHALT SHINGLE ROOF	*For this option, use the listed sheets and details:* Architectural: A2.0, A2.1, A2.2, A5.0, A5.1, A5.2, A5.3, A5.4, A6.0 Wall Assembly Details: A5.0 - TYPES E3, E4 Structural: S0.0, S0.1, S1.0C, S2.0, S2.1, S2.2, S2.3 Mechanical/Plumbing: MP0.1, MP0.2, MP2.3 T24: T24.19, T24.20
☐ GOLDRUSH	*For this option, use the listed sheets and details:* Architectural: A3.0, A3.1, A3.2, A5.0, A5.1, A5.2, A5.3. A6.0 Wall Assembly Details: A5.0 - TYPES E3, E4 Structural: S0.0, S0.1, S1.0C, S2.0, S2.1, S2.2, S2.3 Mechanical/Plumbing: MP0.1, MP0.2, MP2.3 T24: T24.23, T24.24
☐ MEADOW ☐ CEDAR LAP SIDING AT PORCH AREAS HORIZONTAL FIBER CEMENT BOARD ☐ STANDING SEAM METAL ROOF ASPHALT SHINGLE ROOF	*For this option, use the listed sheets and details:* Architectural: A4.0, A4.1, A4.2A5.0, A5.1, A5.2, A5.3. A6.0 Wall Assembly Details: A5.0 - TYPES E3, E4 Structural: S0.0, S0.1, S1.0C, S2.0, S2.1, S2.2, S2.3 Mechanical/Plumbing: MP0.1, MP0.2, MP2.3 T24: T24.21, T24.22
INTERIOR OPTIONS (SELECT CHOICES, IF OPTION IS DESIRED)	
☐ OPTIONAL CURBLESS SHOWER	*Requires foundation coordination. See detail 6/A5.3.*
CODE COMPLIANCE (CHECK IF APPLICABLE)	
☐ EXT. WALL WITHIN 0-5' OF PROPERTY LINE ☐ EXT. WALL WITHIN 0-3' OF PROPERTY LINE	Within 0'-5' of Property Line, the wall assembly shall be 1-Hour Rated. Within 3'-5' of the Property Line, the area of openings shall be limited to 25% of the wall area. Within 0'-3' of the Property Line, all exterior openings shall be omitted.
SITE PLAN (REQUIRED)	
☐ OWNER PROVIDED SITE PLAN COMPLETE	*Complete Sheet CG0.1, Owner-Provided Site Plan*

TWO BEDROOM SUMMIT EXTERIOR - PERSPECTIVE VIEW

TWO BEDROOM LAKESIDE EXTERIOR - PERSPECTIVE VIEW

TWO BEDROOM GOLDRUSH EXTERIOR - PERSPECTIVE VIEW

TWO BEDROOM MEADOW EXTERIOR - PERSPECTIVE VIEW

NOT FOR CONSTRUCTION

DRAWING INDEX

CHECK BOXES FOR THE OPTIONS SELECTED ON THE PROJECT CHECKLIST

GENERAL SHEETS		
	G0.0	PROJECT INFORMATION - TYPE C
	G0.1	OWNER-PROVIDED SITE PLAN - TYPE C
	G1.0	GENERAL NOTES - TYPE C
	G2.0	CALGREEN REQUIREMENTS - TYPE C
	G2.1	CALGREEN REQUIREMENTS - TYPE C
ARCHITECTURAL		
☐	A1.0	C - SUMMIT - FLOORPLAN & ELEVATIONS
☐	A1.1	C - SUMMIT - ROOF PLAN, ELECTRICAL & RCP
☐	A1.2	C - SUMMIT - SECTIONS
☐	A2.0	C - LAKESIDE - FLOORPLAN & ELEVATIONS
☐	A2.1	C - LAKESIDE - ROOF PLAN, ELECTRICAL & RCP
☐	A2.2	C - LAKESIDE - SECTIONS
☐	A3.0	C - GOLDRUSH - FLOORPLAN & ELEVATIONS
☐	A3.1	C - GOLDRUSH - ROOF PLAN, ELECTRICAL & RCP
☐	A3.2	C - GOLDRUSH - SECTIONS
☐	A4.0	C - MEADOW - FLOORPLAN & ELEVATIONS
☐	A4.1	C - MEADOW - ROOF PLAN, ELECTRICAL & RCP
☐	A4.2	C - MEADOW - SECTIONS
	A5.0	EXTERIOR WALL ASSEMBLY DETAILS
	A5.1	EXTERIOR WUI AND ROOF DETAILS
	A5.2	EXTERIOR DETAILS
	A5.3	INTERIOR DETAILS & WALL PARTITIONS
	A6.0	C - SCHEDULES
STRUCTURAL		
	S0.0	TYPICAL DETAILS
	S0.1	STRUCTURAL NOTES
	S1.0C	TYPE C ONE BEDROOM ROOF/CEILING FRAMING & FOUNDATION PLAN
	S2.0	FOUNDATION DETAILS
	S2.1	ROOF FRAMING DETAILS
	S2.2	ROOF FRAMING DETAILS
	S2.3	ROOF FRAMING DETAILS
MECHANICAL AND PLUMBING		
	MP0.1	TITLE SHEET
	MP0.2	SCHEDULES, DETAILS MECHANICAL & PLUMBING
☐	MP2.3	TYPE C TWO BEDROOM - SUMMIT
☐	MP2.3	TYPE C TWO BEDROOM - MEADOW
☐	MP2.3	TYPE C TWO BEDROOM - LAKESIDE
☐	MP2.3	TYPE C TWO BEDROOM - GOLDRUSH
ENERGY COMPLIANCE/TITLE 24		
☐	T24.17	TITLE 24 FORMS TWO BEDROOM SUMMIT
☐	T24.18	TITLE 24 FORMS TWO BEDROOM SUMMIT
☐	T24.19	TITLE 24 FORMS TWO BEDROOM LAKESIDE
☐	T24.20	TITLE 24 FORMS TWO BEDROOM LAKESIDE
☐	T24.21	TITLE 24 FORMS TWO BEDROOM MEADOW
☐	T24.22	TITLE 24 FORMS TWO BEDROOM MEADOW
☐	T24.23	TITLE 24 FORMS TWO BEDROOM GOLDRUSH
☐	T24.24	TITLE 24 FORMS TWO BEDROOM GOLDRUSH

BUILDING CODES USED

1. 2022 CALIFORNIA BUILDING CODE
2. 2022 CALIFORNIA RESIDENTIAL CODE
3. 2022 CALIFORNIA ELECTRICAL CODE
4. 2022 CALIFORNIA PLUMBING CODE
5. 2022 CALIFORNIA MECHANICAL CODE
6. 2022 CALIFORNIA FIRE CODE
7. 2022 CALIFORNIA GREEN BUILDING STANDARDS CODE
8. 2022 CALIFORNIA ENERGY EFFICIENCY STANDARDS CODE
9. 2022 PLUMAS COUNTY CODE OF ORDINANCES

SCOPE OF WORK - TWO BEDROOM

CONSTRUCTION OF A NEW, DETACHED 990 GROSS SQUARE FOOT (GSF) ACCESSORY DWELLING UNIT (ADU) ON THE SUBJECT PARCEL. ADU CONSISTS OF TWO BEDROOMS, TWO FULL BATHROOMS, KITCHEN/GREAT ROOM, AND LAUNDRY AREA.

BY USING THESE PRE-DESIGNED ADU PLANS, THE RECIPIENT IS ACKNOWLEDGING ACCEPTANCE OF THE FOLLOWING CONDITIONS.

1. THE USE OF THIS INFORMATION IS RESTRICTED TO THE ORIGINAL PROJECT FOR WHICH IT WAS PREPARED (THE PRE-DESIGNED ADU PLANS FOR THE COUNTY OF PLUMAS CALIFORNIA). USE OF THESE PLANS DOES NOT ELIMINATE OR REDUCE THE RECIPIENT'S RESPONSIBILITY TO VERIFY ANY AND ALL INFORMATION RELEVANT TO THE RECIPIENT'S WORK AND RESPONSIBILITY ON THIS PROJECT. WORKBENCH AND/OR THE COUNTY OF PLUMAS SHALL NOT BE RESPONSIBLE FOR TRANSLATION ERRORS.

2. THE RECIPIENT RECOGNIZES AND ACKNOWLEDGES THAT THE USE OF THIS INFORMATION WILL BE AT THEIR SOLE RISK AND WITHOUT ANY LIABILITY OR LEGAL EXPOSURE TO WORKBENCH OR THE COUNTY OF PLUMAS. NO WARRANTIES OF ANY NATURE, WHETHER EXPRESS OR IMPLIED, SHALL ATTACH TO THESE DOCUMENTS AND THE INFORMATION CONTAINED THEREON. ANY USE, REUSE, OR ALTERATION OF THESE DOCUMENTS BY THE RECIPIENT OR BY OTHERS WILL BE AT THE RECIPIENT'S RISK AND FULL LEGAL RESPONSIBILITY. FURTHERMORE, THE RECIPIENT WILL, TO THE FULLEST EXTENT PERMITTED BY LAW, INDEMNIFY AND HOLD WORKBENCH AND THE COUNTY OF PLUMAS HARMLESS FROM ANY AND ALL CLAIMS, SUITS, LIABILITY, DEMANDS, JUDGEMENTS, OR COSTS ARISING OUT OF OR RESULTING THERE FROM ON ACCOUNT OF ANY INJURY, DEATH, DAMAGE OR LOSS TO PERSONS OR PROPERTY.

3 THE DESIGNS REPRESENTED BY THESE PLANS ARE COPYRIGHTED AND SUBJECT TO COPYRIGHT PROTECTION. IF THE RECIPIENT DOES NOT AGREE WITH THE ABOVE CONDITIONS, THE RECIPIENT SHOULD NOT PROCEED BEYOND THIS DISCLAIMER.

PLUMAS COUNTY
PRE-DESIGNED ADU
PLAN C- TWO BEDROOM ADU
990 GSF

NOT FOR CONSTRUCTION

PROJECT INFORMATION - TYPE C

G0.0

SCALE : AS NOTED

12/14/2023 10:30:27 AM

HOMEOWNER PROVIDED SITE PLAN

INSERT A DIMENSIONED AND SCALED SITE PLAN FOR THE PROJECT PROPERTY INTO THE BLANK SPACE ON THIS SHEET. USE THE CHECKLIST BELOW TO ENSURE ALL REQUIRED INFORMATION IS INCLUDED.

NOT FOR CONSTRUCTION

FIRE RATING NOTES

WITHIN 4-5 FT OF PROPERTY LINE, THE WALL ASSEMBLY SHALL BE 1-HOUR RATED WITH THE AREA OF OPENINGS LIMITED TO 25% OF THE WALL AREA.

REFERENCE A5.0 "FIRE RATING NOTES" FOR STANDARD
1-HR RATED WALL PER CBC TABLE 721.12, ITEM #15-1.12[9]

BUILDING HEIGHT - PLUMAS COUNTY

NO STRUCTURE IN THE SINGLE-FAMILY RESIDENTIAL ZONES (2-R, 3-R, 7-R) SHALL EXCEED THIRTY-FIVE (35') FEET IN HEIGHT. REFER TO ARTICLE 13 SECTION 9-2.1303 OF THE PLUMAS COUNTY CODE OF ORDINANCES.

VICINITY MAP (OPTIONAL)

NOT TO SCALE

INSERT MAP SHOWING VICINITY OF PROJECT HERE, INCLUDING NEARBY STREETS

SITE PLAN CHECKLIST

THE OWNER SHALL PROVIDE A DIMENSIONED AND SCALED SITE PLAN SHOWING THE BELOW INFORMATION. THIS CHECKLIST IS PROVIDED TO HELP GUIDE YOU THROUGH THE CREATION OF YOUR PROPERTY'S SITE PLAN.

SITE PLAN INFORMATION	EXPLANATION
☐ DRAWING SCALE	SITE PLAN SHOULD BE DRAWN TO A MEASURABLE SCALE (FOR EXAMPLE, 1/8" = 1' OR 1" = 10'). INCLUDE A LABEL WITH THIS INFORMATION ON THE SITE PLAN.
☐ PROPERTY LINES	SHOW OUTLINE OF PROPERTY USING DASHED LINE. DIMENSION EACH PROPERTY LINE WITH ITS RESPECTIVE LENGTH
☐ LABELED YARDS	LABEL FRONT, REAR, SIDE YARDS, WALKWAYS, DRIVEWAYS, AND PATIO/OUTDOOR HARDSCAPING AREAS USING TEXT. LABEL ANY PROPOSED NEW PATHWAYS, PARKING SPACES, OR ACCESS ROUTES TO THE NEW ADU. IF APPLICABLE, INDICATE LOCATION OF FENCES, GATES, TREES AND WATERCOURSES.
☐ SETBACKS OF EXISTING STRUCTURE AND NEW ADU FROM PROPERTY LINE - DIMENSIONED	"SETBACK" REFERS TO THE DISTANCE BETWEEN A BUILDING AND THE PROPERTY LINE OR BETWEEN TWO BUILDINGS. THE ADU SHOULD BE LOCATED 5'-0" FROM ANY SIDE/REAR PROPERTY LINES, ***PER STORY***. IF THE EXTERIOR WALLS ARE FIRE RATED THE ADU MAY BE LOCATED 4'-0" FROM PROPERTY LINES. USING A DIMENSION LINE, INDICATE THE DISTANCE FROM THE ADU EXTERIOR WALLS TO THE PROPERTY LINE.
☐ EASEMENTS (IF SUCH EXIST)	"EASEMENT" REFERS TO A PROPERTY RIGHT HELD BY A PARTY THAT IS NOT OWNER OF THE PROPERTY. THIS COULD INCLUDE ITEMS SUCH AS A RIGHT-OF-WAY OR UTILITY COMPANY EASEMENT.
☐ LOCATION OF EXISTING UTILITIES AND PROPOSED NEW UTILITIES	NOTE AND LABEL THE LOCATION OF ANY UTILITY POLES, OVERHEAD SERVICE, SEWER DRAINS/CLEANOUTS, ELECTRICAL PANELS, PHOTOVOLTAIC CONTROLS, AND GAS METERS/LINES WHICH EXIST ON THE PROPERTY OR ARE PROPOSED. INDICATE SIZE OF SUBPANELS. INDICATE LOCATION OF EXISTING OR PROPOSED FIRE SUPRESSION SYSTEM TANK AND CAPACITY.
☐ LABELED STREETS	SITE PLAN SHOULD SHOW THE STREET EDGE WITH THE STREET NAME LABELED. LABEL EXISTING SIDEWALK AND CURBS, IF SUCH EXIST.
☐ PROPOSED LOCATION OF ADU ADDRESS NUMBERS	NOTE AND LABEL PROPOSED LOCATION OF ADU ADDRESS NUMBERS. NUMBERS SHALL BE VISIBLE FROM THE STREET, HIGH-CONTRAST, AND NO LESS THAN 4" IN HEIGHT. REFER TO CURRENT COUNTY OF PLUMAS ADDRESSING STANDARDS AND ADDRESS APPLICATION.
☐ FOOTPRINT OF EXISTING BUILDINGS	"FOOTPRINT" REFERS TO THE OUTLINE OF A BUILDING. SHOW THE FOOTPRINT OF ALL EXISTING BUILDINGS/STRUCTURES AND ANY ATTACHED DECKS OR PORCHES.
☐ FOOTPRINT OF PROPOSED ADU	"FOOTPRINT" REFERS TO THE OUTLINE OF A BUILDING. SHOW THE PROPOSED LOCATION OF THE NEW ADU BY PLACING THE FOOTPRINT ON THE SITE PLAN WITH THE TEXT LABEL "PROPOSED ADU"
☐ DIMENSION SHOWING MINIMUM SEPARATION SPACE BETWEEN ADU AND EXISTING STRUCTURES	USING A DIMENSION LINE, INDICATE IN FEET AND INCHES THE DISTANCE BETWEEN THE ADU AND ANY EXISTING DWELLINGS, GARAGES, SHEDS, OR ACCESSORY STRUCTURES. REQUIRED MINIMUM SEPARATION BETWEEN BUILDINGS SHALL BE 5 FEET.

SITE PLAN LEGEND

USE THESE SYMBOLS TO DRAW AND ANNOTATE YOUR SITE PLAN

N	NORTH ARROW (INDICATES LOCATION OF NORTH)
6' - 0"	DIMENSION LINE (SHOWS MEASUREMENT BETWEEN 2 PLANES) LABEL WITH MEASUREMENT IN FEET AND INCHES
	PROPERTY LINE (SHOWS OUTLINE OF PROPERTY)
	DASHED LINE - USE FOR EASEMENTS, FENCES, PARKING SPOTS
	SOLID LINE - USE TO SHOW OUTLINE OF EXISTING BUILDINGS, EXTENTS OF DRIVEWAYS OR PATIOS
MAIN ST.	TEXT LABEL - USE TO LABEL DRAWING AS NEEDED
	ARROW - USE FOR CALLOUTS AS NEEDED

workbench

189 WALNUT AVENUE
SANTA CRUZ, CA 95060
WORKBENCHBUILT.COM
P: 831.227.2217

BY USING THESE PRE-DESIGNED ADU PLANS, THE RECIPIENT IS ACKNOWLEDGING ACCEPTANCE OF THE FOLLOWING CONDITIONS.

1. THE USE OF THIS INFORMATION IS RESTRICTED TO THE ORIGINAL PROJECT FOR WHICH IT WAS PREPARED (THE PRE-DESIGNED ADU PLANS FOR THE COUNTY OF PLUMAS CALIFORNIA). USE OF THESE PLANS DOES NOT ELIMINATE OR REDUCE THE RECIPIENT'S RESPONSIBILITY TO VERIFY ANY AND ALL INFORMATION RELEVANT TO THE RECIPIENT'S WORK AND RESPONSIBILITY ON THIS PROJECT. WORKBENCH AND/OR THE COUNTY OF PLUMAS SHALL NOT BE RESPONSIBLE FOR TRANSLATION ERRORS.

2. THE RECIPIENT RECOGNIZES AND ACKNOWLEDGES THAT THE USE OF THIS INFORMATION WILL BE AT THEIR SOLE RISK AND WITHOUT ANY LIABILITY OR LEGAL EXPOSURE TO WORKBENCH OR THE COUNTY OF PLUMAS. NO WARRANTIES OF ANY NATURE, WHETHER EXPRESS OR IMPLIED, SHALL ATTACH TO THESE DOCUMENTS AND THE INFORMATION CONTAINED THEREON. ANY USE, REUSE, OR ALTERATION OF THESE DOCUMENTS BY THE RECIPIENT OR BY OTHERS WILL BE AT THE RECIPIENT'S RISK AND FULL LEGAL RESPONSIBILITY. FURTHERMORE, THE RECIPIENT WILL, TO THE FULLEST EXTENT PERMITTED BY LAW, INDEMNIFY AND HOLD WORKBENCH AND THE COUNTY OF PLUMAS HARMLESS FROM ANY AND ALL CLAIMS, SUITS, LIABILITY, DEMANDS, JUDGEMENTS, OR COSTS ARISING OUT OF OR RESULTING THERE FROM ON ACCOUNT OF ANY INJURY, DEATH, DAMAGE OR LOSS TO PERSONS OR PROPERTY.

3 THE DESIGNS REPRESENTED BY THESE PLANS ARE COPYRIGHTED AND SUBJECT TO COPYRIGHT PROTECTION. IF THE RECIPIENT DOES NOT AGREE WITH THE ABOVE CONDITIONS, THE RECIPIENT SHOULD NOT PROCEED BEYOND THIS DISCLAIMER.

PLUMAS COUNTY PRE-DESIGNED ADU

PLAN C- TWO BEDROOM ADU
990 GSF

NOT FOR CONSTRUCTION

OWNER-PROVIDED SITE PLAN - TYPE C

G0.1

SCALE : AS NOTED

12/14/2023 10:30:27 AM

GENERAL NOTES

1. ALL WORK PERFORMED SHALL COMPLY WITH THE CONTRACT DOCUMENTS, DRAWINGS AND SPECIFICATIONS, INCLUDING THESE GENERAL NOTES. THE CONTRACTOR SHALL COORDINATE THE INTENT OF THE GENERAL NOTES WITH ALL TRADES.
2. NO DEVIATION FROM CONTRACT DRAWINGS AND SPECIFICATIONS SHALL BE MADE WITHOUT WRITTEN APPROVAL OF THE OWNER. REVISIONS TO BE SUBMITTED, REVIEWED AND APPROVED BY THE COUNTY OF PLUMAS.
3. ALL MATERIALS AND WORKMANSHIP SHALL CONFORM TO THE DRAWINGS AND SPECIFICATIONS.
4. CONTRACTOR TO REVIEW DOCUMENTS, VERIFY DIMENSIONS AND FIELD CONDITIONS AND CONFIRM THAT WORK IS BUILDABLE AS SHOWN. REPORT ANY CONFLICTS OR OMISSIONS TO THE OWNER FOR DIRECTION PRIOR TO PERFORMING ANY WORK IN QUESTION.
5. THE STRUCTURAL, MECHANICAL AND PLUMBING DRAWINGS ARE SUPPLEMENTARY TO THE ARCHITECTURAL DRAWINGS. CONTRACTOR TO REVIEW STRUCTURAL, MECHANICAL, AND PLUMBING DRAWINGS BEFORE THE INSTALLATION OF STRUCTURAL, MECHANICAL AND PLUMBING WORK. SHOULD THERE BE A CONFLICT OR DISCREPANCY BETWEEN THE ARCHITECTURAL DRAWINGS AND THE CONSULTING ENGINEERS' DRAWINGS IT SHALL BE BROUGHT TO THE OWNER'S ATTENTION FOR DIRECTION PRIOR TO INSTALLATION OF SAID WORK, ANY WORK INSTALLED IN CONFLICT WITH THE ARCHITECTURAL DRAWINGS SHALL BE CORRECTED BY THE CONTRACTOR AT NO ADDITIONAL COST.
6. DO NOT SCALE DRAWINGS; DIMENSIONS SHALL TAKE PRECEDENCE OVER SCALES SHOWN ON DRAWINGS, GENERAL CONTRACTOR SHALL VERIFY ALL DIMENSIONS, GRADES AND CONDITIONS AT SITE PRIOR TO COMMENCING THE WORK.
7. ALL DIMENSIONS ARE TO FACE OF CONCRETE, FACE OF CONCRETE BLOCK WALLS AND FACE OF SCHEDULED PARTITION, UNLESS OTHERWISE NOTED.
8. DIMENSIONS ARE TO FRAMING OR STRUCTURAL MEMBERS, UNLESS OTHERWISE NOTED.
9. WHERE A TYPICAL DETAIL IS SHOWN, IT SHALL BE UNDERSTOOD THAT ALL LIKE OR SIMILAR CONDITIONS ARE THE SAME UNLESS SPECIFICALLY NOTED OR DETAILED OTHERWISE.
10. CONTRACTOR TO COMPLY WITH CODES, LAWS, ORDINANCES, RULES, AND REGULATIONS OF PUBLIC AUTHORITIES GOVERNING THE WORK.
11. CONTRACTOR SHALL OBTAIN ALL NECESSARY PERMITS FROM THE STATE OF CALIFORNIA DIVISION OF INDUSTRIAL SAFETY, OSHA DEPARTMENT, FOR TRENCHES OR EXCAVATIONS GREATER THAN 5'-0" DEEP INTO WHICH A PERSON IS REQUIRED TO DESCEND FOR CONSTRUCTION PURPOSES.
12. CONTRACTOR TO MAINTAIN EXITS, EXIT LIGHTING, FIRE PROTECTIVE DEVICES AND ALARMS IN CONFORMANCE WITH CODES AND ORDINANCES.
13. CONTRACTOR SHALL PROVIDE TEMPORARY EXIT SIGNS TO ASSURE A MEANS OF EGRESS DURING CONSTRUCTION.
14. CONTRACTOR SHALL PROTECT THE AREA OF WORK AND ADJACENT AREAS FROM DAMAGE.
15. CONTRACTOR SHALL COORDINATE TRASH REMOVAL ACCESS PER MUNICIPALITY REQUIREMENTS.
16. MATERIALS STORED ON THE SITE SHALL BE PROPERLY STACKED & PROTECTED TO PREVENT DAMAGE & DETERIORATION UNTIL USE. FAILURE TO PROTECT MATERIALS MAY BE CAUSE FOR REJECTION OF WORK BY OWNER.
17. CONTRACTOR SHALL PROTECT STORED ON-SITE AND INSTALLED ABSORPTIVE MATERIALS FROM MOISTURE DAMAGE AND MAINTAIN THE JOB SITE IN A CLEAN, ORDERLY CONDITION FREE OF DEBRIS AND LITTER. EACH SUB-CONTRACTOR IMMEDIATELY UPON COMPLETION OF EACH PHASE OF THEIR WORK SHALL REMOVE ALL TRASH & DEBRIS AS A RESULT OF THEIR OPERATIONS.
18. CONTRACTOR TO MAINTAIN WORK AREAS SECURE AND LOCKABLE DURING CONSTRUCTION.
19. FIRE PROTECTION EQUIPMENT AND SERVICE ACCESS MUST BE MAINTAINED AND PROVIDED DURING THE CONSTRUCTION PERIOD.
20. PUBLIC IMPROVEMENTS AND SERVICES ADJACENT TO THE SITE SHALL BE MAINTAINED DURING CONSTRUCTION. APPROVAL OF THE APPROPRIATE GOVERNING BODY IS REQUIRED BEFORE ANY WORK IS COMMENCED.
21. CONTRACTOR SHALL COORDINATE SITE PLUMBING, DRAINAGE, ELECTRICAL, TELEPHONE WORK AND EXISTING UTILITIES TO PROVIDE A COMPLETE OPERATING SYSTEM.
22. CLIENT WILL PROVIDE WORK NOTED "BY OTHERS" OR "N.I.C." UNDER A SEPARATE CONTRACT. INCLUDE SCHEDULE REQUIREMENTS IN CONSTRUCTION PROGRESS SCHEDULE AND COORDINATE TO ASSURE ORDERLY SEQUENCE OF INSTALLATION.
23. EXCEPT WHERE SHOWN IN DIMENSIONAL DETAIL, OR AS REQUIRED BY CODE, THE LOCATIONS OF PLUMBING, MECHANICAL EQUIPMENT, DUCTS, PIPING AND FITTING ARE APPROXIMATE. THE EXACT LOCATIONS SHALL BE DETERMINED BY THE CONTRACTOR IN ACCORDANCE WITH ALL APPLICABLE BUILDING CODES.
24. CONTRACTOR SHALL VERIFY SIZES AND LOCATIONS OF ALL MECHANICAL EQUIPMENT PADS AND BASES AS WELL AS POWER AND WATER OR DRAIN INSTALLATIONS WITH EQUIPMENT MANUFACTURERS BEFORE PROCEEDING WITH THE WORK. CHANGES TO ACCOMMODATE FIELD CONDITIONS OR SUBSTITUTIONS SHALL BE MADE AT NO ADDITIONAL COST.
25. CONTRACTOR SHALL VERIFY SIZE AND LOCATION OF ALL MECHANICAL OPENINGS THROUGH THE ROOF WITH MECHANICAL EQUIPMENT MANUFACTURERS.
26. CONTRACTOR SHALL PROVIDE AND INSTALL ALL STIFFENERS, BRACING, BLOCKING, BACK-UP PLATES AND SUPPORTING BRACKETS REQUIRED FOR THE INSTALLATION OF ALL CASEWORK, TOILET ROOM ACCESSORIES, FIXTURES AND PARTITIONS AND ALL WALL MOUNTED OR SUSPENDED MECHANICAL, ELECTRICAL OR MISCELLANEOUS EQUIPMENT AND FURNISHINGS.
27. CONTRACTOR TO COORDINATE AND PROVIDE BACKING FOR MILLWORK AND ITEMS ATTACHED OR MOUNTED TO WALLS OR CEILINGS.
28. CONTRACTOR SHALL CONFINE OPERATIONS AT THE SITE TO AREAS PERMITTED BY LAW, ORDINANCES, PERMITS & THE CONTRACT DOCUMENTS, AND SHALL NOT UNREASONABLY ENCUMBER THE SITE WITH ANY MATERIALS OR EQUIPMENT.
29. SHOULD CONFLICT OCCUR IN OR BETWEEN DRAWINGS & SPECIFICATIONS, OR WHERE DETAIL REFERENCES ON CONTRACT DRAWINGS HAVE BEEN OMITTED, CONTRACTOR IS DEEMED TO HAVE ESTIMATED THE MOST EXPENSIVE MATERIALS AND CONSTRUCTION INVOLVED UNLESS THEY SHALL HAVE ASKED FOR AND OBTAINED ANY WRITTEN DECISIONS FROM THE OWNER AS TO WHICH METHOD OR MATERIALS WILL BE REQUIRED.
30. ALL MECHANICAL & ELECTRICAL EQUIPMENT SHALL HAVE A UL DESIGN LISTING/NUMBER. ANY EQUIPMENT NOT LISTED WILL REQUIRE FIELD TESTING & CERTIFICATION BY AN APPROVED TESTING AGENCY. IT IS THE RESPONSIBILITY OF THE OWNER & THEIR DESIGN/CONSTRUCTION TEAM TO NOTIFY THE BUILDING DEPARTMENT IF FIELD-TESTING IS REQUIRED FOR ANY EQUIPMENT WITHOUT AN EQUIVALENT LISTED LABEL APPROVED BY THE LOCAL CITY OR COUNTY BUILDING DEPARTMENT. PROOF OF EQUIPMENT CERTIFICATION SHALL BE SUBMITTED & APPROVED BEFORE A CERTIFICATE OF OCCUPANCY CAN BE ISSUED.
31. HAZARDOUS MATERIALS: THE ARCHITECT AND THE ARCHITECT'S CONSULTANTS SHALL HAVE NO RESPONSIBILITY FOR THE DISCOVERY, PRESENCE, HANDLING, REMOVAL, OR DISPOSAL OF OR EXPOSURE OF PERSONS TO ASBESTOS OR HAZARDOUS OR TOXIC SUBSTANCES IN ANY FORM OF THE PROJECT SITE. PROFESSIONAL SERVICES RELATED OR IN ANY WAY CONNECTED WITH THE INVESTIGATION, DETECTION, ABATEMENT, REPLACEMENT, USE, SPECIFICATION, OR REMOVAL OF PRODUCTS, MATERIALS, OR PROCESSES CONTAINING ASBESTOS OR HAZARDOUS OR TOXIC MATERIALS ARE BEYOND THE SCOPE OF THE AGREEMENT.
32. ACCESSORY DWELLING UNITS (ADUS) ARE TO BE PROVIDED WITH ACCESSIBLE SHUTOFFS FOR WATER AND GAS CONNECTIONS SERVING THE ADU.
33. EXISTING OR PROPOSED FIRE SUPPRESSION SYSTEM TO COMPLY WITH COUNTY POLICY ON FREEZE PROTECTION. SEE BELOW FOR ADDITIONAL INFORMATION.

FREEZE PROTECTION

THE FOLLOWING ARE REQUIREMENTS PER FREEZE PROTECTION 312.6 2022 C.P.C. POLICY #03-03-06 REV. 01-10-13

APPROVED ADEQUATE PROVISION FOR NEW CONSTRUCTION AND/OR NEW ADDITIONS TO EXISTING STRUCTURES SHALL BE AS FOLLOWS:

1) NO WATER SUPPLY LINES, DWV TRAPS, OR WATER RETAINING APPLIANCES O[illegible] DEVICES (I.E., WASHING MACHINES, PRESSURE TANKS, RECESSED [illegible]ASHING MACHINE OR ICE MAKER SUPPLY BOXES, ETC.) ARE TO BE [illegible] IN UNHEATED SPACES OF THE STRUCTURE (I.E. EXTERIOR WALLS, ATTIC, GARAGES, UNHEATED CLOSETS, ETC.).
2) WATER SUPPLY LINES MAY BE IN THE EXTERIOR WALL OF CONDITIONED SPACES IF:

A) THE WALL IS A MINIMUM [illegible] THICK WOOD, [illegible]
B) THE PIPING IS LOCATED [illegible] AN MINIMUM OF R-11 OF UNCOMPRESSED WALL INSULATION IS PROPERLY INSTALLED BEHIND THE PIPING.

3) WATER SUPPLY LINES AND DWV TRAPS ARE ALLOWED IN UNDERFLOOR AREAS OF CONDITIONED SPACES WHEN LOCATED MORE THAN 5' FROM A FOUNDATION VENT OR SIMILAR OPENING.
4) A WATER PIPING DRAIN DOWN SYSTEM IS RECOMMENDED, BUT NOT REQUIRED IN AREAS WITH SNOW LOADS LESS THAN 100 LB/SQ.FT. IN AREAS OF 100 LB/SQ.FT. AND GREATER SNOW LOADS, DRAIN DOWN SYSTEM IS REQUIRED.
5) HEAT TAPE IS NOT AN APPROVED ALTERNATE FREEZE PROTECTION METHOD FOR NEW CONSTRUCTION

ABBREVIATIONS

AB	ANCHOR BOLT	DEPT	DEPARTMENT	FTG	FOOTING	MIN	MINIMUM	SEC	SECTION
AC	ASPHALT CONCRETE	DIA	DIAMETER	GA	GAUGE	MISC	MISCELLANEOUS	SED	SEE ELECTRICAL DRAWINGS
AD	AREA DRAIN	DIAG	DIAGONAL	GALV	GALVANIZED	MTD	MOUNTED	SF	SQUARE FOOT
ADJ	ADJACENT	DIM	DIMENSION	GC	GENERAL CONTRACTOR	MTL	METAL	SPEC	SPECIFICATION
AFF	ABOVE FINISH FLOOR	DL	DEAD LOAD	GWB	GYPSUM WALL BOARD	(N)	NEW	SPD	SEE PLUMBING DRAWINGS
AL	ALIGN	DN	DOWN	HD	HOLDOWN	NIC	NOT IN CONTRACT	SSD	SEE STRUCTURAL DRAWINGS
ALUM	ALUMINUM	DR	DOOR	HDR	HEADER	NA	NOT APPLICABLE	SS	SOLID SURFACE
ALT	ALTERNATE	DWG	DRAWING	HGR	HANGER	NTS	NOT TO SCALE	STD	STANDARD
ARCH	ARCHITECT/ARCHITECTURAL	DW	DISHWASHER	HM	HOLLOW METAL	O/	OVER	STL	STEEL
AVG	AVERAGE	(E)	EXISTING	HORIZ	HORIZONTAL	OC	ON CENTER	STRUCT	STRUCTURAL
BD	BOARD	EA	EACH	HT	HEIGHT	OH	OVERHEAD/OVERHANG	SUSP	SUSPENDED
BLDG	BUILDING	EB	EXPANSION BOLT	HVAC	HEATING/VENTILATION/ AIR CONDITIONING	OPNG	OPENING	SYS	SYSTEM
BLKG	BLOCKING	EJ	EXPANSION JOINT			PL	PLATE	T	TEMPERED
BTM	BOTTOM	ELEC	ELECTRIC/ELECTRICAL	HW	HOT WATER	PLF	POUNDS PER LINEAL FOOT	TOC	TOP OF CURB
BTWN	BETWEEN	ELEV	ELEVATOR/ELEVATION	IN	INCH/INCHES	PLYWD	PLYWOOD	TYP	TYPICAL
BUR	BUILT-UP ROOFING	EN	EDGE NAILING	INFO	INFORMATION	PTD	PAINTED	UON	UNLESS OTHERWISE NOTED
CB	CATCH BASIN	ENCL	ENCLOSURE	INSUL	INSULATION	PSF	POUNDS PER SQUARE FOOT	VERT	VERTICAL
CF	CUBIC FEET	EP	ELECTRICAL PANEL	INT	INTERIOR	PSI	POUNDS PER SQUARE INCH	VIF	VERIFY IN FIELD
CJ	CONTROL JOINT	EQUIP	EQUIPMENT	JT	JOINT	PT	PRESSURE TREATED	W/	WITH
CLKG	CAULKING	EXT	EXTERIOR	KIT	KITCHEN	PVMT	PAVEMENT	WC	WATER CLOSET
CLG	CEILING	FD	FLOOR DRAIN	LB	LAG BOLT	RA	RETURN AIR	WD	WOOD
CLR	CLEAR	FF	FINISH FLOOR	LBS	POUNDS	RCP	REFLECTED CEILING PLAN	WH	WATER HEATER
CO	CLEANOUT	FIN	FINISH	LF	LINEAR FOOT	RD	ROOF DRAIN	WDW	WINDOW
COTG	CLEANOUT TO GRADE	FL	FLOW LINE	LL	LIVE LOAD	REF	REFERENCE	W/O	WITHOUT
COL	COLUMN	FLSHG	FLASHING	LS	LAG SCREW	REFR	REFRIGERATOR	WP	WATERPROOF
CONC	CONCRETE	FLR	FLOOR	MAX	MAXIMUM	REQD	REQUIRED	WT	WEIGHT
CONT	CONTINUOUS	FOC	FACE OF CONCRETE	MB	MACHINE BOLT	REV	REVISION		
CT	CERAMIC TILE	FOS	FACE OF STUD	MECH	MECHANICAL	RM	ROOM		
CTR	CENTER	FOW	FACE OF WALL	MFD	MANUFACTURED	RO	ROUGH OPENING		
CW	COLD WATER	FRMG	FRAMING	MFR	MANUFACTURER	SCHED	SCHEDULE		
DBL	DOUBLE	FT	FOOT	MICRO	MICROWAVE	SD	STORM DRAIN		

ELECTRICAL NOTES

1. PROVIDE GFCI PROTECTED OUTLETS AT ALL KITCHEN COUNTERTOPS, BATHROOM COUNTERTOPS, OUTDOOR LAUNDRY AREAS, DISHWASHERS, OUTDOOR LOCATIONS, AND REQUIRED LOCATIONS PER CEC 210.8.
2. KITCHEN COUNTERTOP RECEPTACLES SHALL BE INSTALLED SO THAT NO POINT ALONG THE WALL LINE IS MORE THAN 24" FROM AN OUTLET.
3. PROVIDE (2) TWO 20 AMP SMALL APPLIANCE CIRCUITS IN KITCHEN.
4. PROVIDE SEPARATE CIRCUIT FOR ELECTRIC RANGE AS REQUIRED BY CEC 210.19.
5. PROVIDE SEPARATE CIRCUIT FOR RANGE HOOD OR MICROWAVE/HOOD UNIT.
6. PROVIDE SEPARATE CIRCUIT FOR DISHWASHER. DISHWASHER RECEPTACLE MUST BE ACCESSIBLE AND GFCI PROTECTED.
7. PROVIDE SEPARATE CIRCUIT FOR GARBAGE DISPOSAL, IF USED, AND SHALL BE GFCI PROTECTED.
8. PROVIDE SEPARATE CIRCUIT AT LOCATIONS OF ELECTRIC DRYERS PER CEC 220.54.
9. PROVIDE SEPARATE CIRCUIT AT LOCATIONS OF ELECTRIC WATER HEATERS PER CEC 422.13.
10. ALL BRANCH CIRCUITS THAT SUPPLY OUTLETS INSTALLED IN DWELLING UNIT KITCHENS, FAMILY ROOMS, DINING ROOMS, LIVING ROOMS, PARLORS, LIBRARIES, DENS, BEDROOMS, SUNROOMS, RECREATION ROOMS, CLOSETS, HALLWAYS, LAUNDRY AREAS, OR SIMILAR ROOMS OR AREAS SHALL BE PROTECTED BY AN ARC-FAULT CIRCUIT INTERRUPTER W/ BATTERY BACKUP.
11. ALL SMOKE DETECTORS OR CARBON MONOXIDE DETECTORS TO BE 110V, ARC-FAULT CIRCUIT INTERRUPTER INTERCONNECTED, W/ BATTERY BACKUP.
12. PROVIDE UFER GROUND FOR NEW SERVICES. PROVIDE DISCONNECT SWITCH AT SEPARATE STRUCTURE IF MORE THAN TWO BRANCH CIRCUITS ARE PROPOSED. MINIMUM 225 AMP PUSH BAR REQUIRED.
13. ALL 125-VOLT, 15-AND 20 AMPERE RECEPTACLES IN THE DWELLING SHALL BE TAMPER RESISTANT. CEC406.12.
14. KITCHEN RECEPTACLES SHALL BE SPACED AND INSTALLED PER CEC 210.52.
15. ALL NEW, MODIFIED, REPLACED OR EXTENDED 120 VOLT BRANCH CIRCUITS SERVING KITCHENS, FAMILY ROOMS, DINING ROOMS, LIVING ROOMS, DENS, BEDROOMS, CLOSETS, HALLWAYS, LAUNDRY AREAS, OR SIMILAR AREAS MUST HAVE ARC-FAULT CIRCUIT INTERRUPTION (AFCI) PROTECTION. SEE CEC 210.12[A]
16. GANG SWITCHES AND ALIGN OUTLETS TO SWITCH VERTICALLY.
17. ELECTRICAL RECEPTACLES, OUTLETS, SWITCHES AND CONTROLS (INCLUDING CONTROLS FOR HEATING, VENTILATION AND AIR CONDITIONING) INTENDED TO USE BY OCCUPANTS SHALL BE LOCATED NO MORE THAN 48 INCHES MEASURED FROM THE TOP OF THE OUTLET BOX AND NOT LESS THAN 15 INCHES MEASURED FROM THE BOTTOM OF THE OUTLET BOX ABOVE THE FINISH FLOOR PER CRC R327.1.1.1
18. PROVIDE BATTERY-READY INFRASTRUCTURE PER 2022 BUILDING ENERGY EFFICIENCY STANDARDS FOR SINGLE FAMILY RESIDENCES (150.0(s))
19. ALL SERVICES SUPPLYING DWELLING UNITS SHALL BE PROVIDED WITH A SURGE-PROTECTIVE DEVICE (SPD). THE SPD SHALL BE AN INTEGRAL PART OF THE SERVICE EQUIPMENT OR SHALL BE LOCATED IMMEDIATELY ADJACENT THERETO. THE SPD SHALL BE TYPE 1 OR 2 SPD. WHERE SERVICE EQUIPMENT IS REPLACE, ALL OF THE REQUIREMENTS OF THIS SECTION SHALL APPLY. CEC 230.67

AC[illegible]NG[illegible]N PLACE NOTES

THE FOLLOWING ARE MINIMUM REQUIREMENTS PER THE MOST RECENT VERSION OF THE CALIFORNIA RESIDENTIAL CODE, R327.1.1

AT LEAST ONE BATHROOM ON THE ENTRY LEVEL SHALL BE PROVIDED WITH REINFORCEMENT INSTALLED IN ACCORDANCE WITH THE FOLLOWING:

1. REINFORCEMENT SHALL BE AT LEAST 2X8 LUMBER AND SHALL BE LOCATED BETWEEN 32" AND 39-1/4" ABOVE THE FINISHED FLOOR.
2. WATER CLOSET REINFORCEMENT SHALL BE INSTALLED ON BOTH SIDE WALLS OF THE FIXTURE OR ON ONE SIDE WALL AND THE BACK WALL. (SEE EXCEPTION FOR TOILETS NOT LOCATED ADJACENT TO A WALL).
3. SHOWER REINFORCEMENT SHALL BE CONTINUOUS WHERE WALL FRAMING IS PROVIDED.
4. BATHTUB AND COMBINATION BATHTUB/SHOWER REINFORCEMENT SHALL BE CONTINUOUS ON EACH END OF THE BATHTUB AND THE BACK WALL. ADDITIONALLY, BACK WALL REINFORCEMENT FOR A LOWER GRAB BAR SHALL BE PROVIDED WITH THE BOTTOM EDGE LOCATED NO MORE THAN 6 INCHES ABOVE THE BATHTUB RIM.

WUI/SRA NOTES

THE FOLLOWING ARE MINIMUM REQUIREMENTS PER THE MOST RECENT VERSION OF THE CALIFORNIA BUILDING CODE, CHAPTER 7A, AND THE CALIFORNIA RESIDENTIAL CODE SECTION R337.

NEW BUILDINGS LOCATED IN ANY FIRE HAZARD SEVERITY ZONE OR ANY WILDLAND-URBAN INTERFACE (WUI) FIRE AREA DESIGNATED BY THE ENFORCING AGENCY CONSTRUCTED AFTER THE APPLICATION DATE SHALL COMPLY WITH THE PROVISIONS OF THESE SECTIONS.

VEGETATION MANAGEMENT COMPLIANCE. R3371.5
PRIOR TO BUILDING PERMIT FINAL APPROVAL, THE PROPERTY SHALL BE IN COMPLIANCE WITH THE VEGETATION MANAGEMENT REQUIREMENTS PRESCRIBED IN CALIFORNIA FIRE CODE SECTION 4906 AND 4907, INCLUDING CALIFORNIA PUBLIC RESOURCES CODE 4291 OR CALIFORNIA GOVERNMENT CODE SECTION 51182.

ROOFS AND ROOF EDGES. CBC 705A / CRC R337.5
ROOFS SHALL COMPLY WITH THE REQUIREMENTS OF THE CBC 705A AND SECTIONS CRC337 AND CRC902. NONCOMBUSTIBLE (TILE OR METAL) OR CLASS 'A' ROOFING (CLASS A ASPHALT SHINGLES) ASSEMBLY IS REQUIRED IN SRA - VERY HIGH FIRE HAZARD SEVERITY ZONES. BIRD STOPS SHALL BE USED AT THE EAVES WHEN THE PROFILE FITS, TO PREVENT DEBRIS AT THE EAVE. HIP AND RIDGE CAPS SHALL BE MUDDED IN TO PREVENT INTRUSION OF FIRE OR EMBERS.

OFF RIDGE AND RIDGE VENTS. R337.6.2.1
VENTS THAT ARE INSTALLED ON A SLOPED ROOF, SUCH AS DORMER VENTS, SHALL COMPLY WITH ALL THE FOLLOWING:

1. VENTS SHALL BE COVERED WITH A MESH WHERE THE DIMENSIONS OF THE MESH THEREIN SHALL BE A MINIMUM OF 1/16 INCH (1.6 MM) AND SHALL NOT EXCEED 1/8 INCH (3.2 MM) IN DIAMETER.
2. THE MESH MATERIAL SHALL BE NONCOMBUSTIBLE.
3. THE MESH MATERIAL SHALL BE CORROSION RESISTANT.

EXTERIOR WALLS/SIDING. CBC 707A.3 /CRC R337.7.1/CRC R337.7.3
WALLS SHALL BE A NONCOMBUSTIBLE MATERIAL, LISTED IGNITION-RESISTANT MATERIALS, OR FIRE-RETARDANT TREATED WOOD. HEAVY TIMBER, 5/8" TYPE X GYPSUM SHEATHING BEHIND EXTERIOR COVERING, BOXED-IN ROOF EAVE SOFFIT ASSEMBLIES THAT MEET THE PERFORMANCE CRITERIA IN SECTION R337.7.11 AND SFM STANDARD 12-71-3. EXTERIOR PORTION OF 1-HR ASSEMBLY OR LOG WALL CONSTRUCTION IS ALLOWED. EXTERIOR WALL COVERINGS SHALL EXTEND FROM THE TOP OF THE FOUNDATION TO THE ROOF, AND TERMINATE AT 2 INCH NOMINAL SOLID WOOD BLOCKING BETWEEN RAFTERS AT ALL ROOF OVERHANGS, OR IN THE CASE OF ENCLOSED EAVES, TERMINATE AT THE ENCLOSURE.

EAVES AND PORCH CEILINGS CBC 707A.4, A.6 / CRC 337.7.4. R337.7.6
THE EXPOSED ROOF DECK UNDER UNENCLOSED EAVES AND UNDERSIDE OF PORCH CEILINGS SHALL BE NONCOMBUSTIBLE, LISTED IGNITION-RESISTANT MATERIALS, FIRE-RETARDANT-TREATED WOOD, MATERIALS APPROVED FOR NOT LESS THAN 1-HOUR FIRE-RESISTANCE-RATED, OR 5/8" TYPE X GYPSUM SHEATHING BEHIND EXTERIOR COVERING. SOLID WOOD RAFTER TAILS SHALL BE PROTECTED WITH AN APPROVED METHOD, AND NOT EXPOSED.

VENTS. CBC 706A / CRC R337.6
VENTILATION OPENINGS SHALL BE FULLY COVERED WITH WILDFIRE FLAME AND EMBER RESISTANT VENTS APPROVED AND LISTED BY THE CALIFORNIA STATE FIRE MARSHAL, OR WUI VENTS TESTED TO ASTM E2886. VENTS THAT ARE INSTALLED ON A SLOPE SHALL COMPLY WITH **CBC 706A2.1**.

WINDOWS AND EXTERIOR DOORS. CBC 708A / CRC R337.8
WINDOWS, SKYLIGHTS AND EXTERIOR GLAZED DOOR ASSEMBLIES SHALL BE CONSTRUCTED OF MULTIPANE GLAZING WITH A MINIMUM OF 1 TEMPERED PANE OR 20 MIN RATED OR GLASS BLOCK. EXTERIOR DOORS MUST BE NONCOMBUSTIBLE OR IGNITION RESISTANT MATERIAL OR 1 3/8" SOLID CORE, OR HAVE A 20 MIN FIRE-RESISTANCE RATING.

EXTERIOR DECKING AND STAIRS. CBC 709A / CRC R337.9
WALKING SURFACES OF DECKS, PORCHES. BALCONIES AND STAIRS WITHIN 10 FEET OF THE BUILDING MUST BE CONSTRUCTED OF NONCOMBUSTIBLE, FIRE-RETARDANT TREATED OR HEAVY-TIMBER CONSTRUCTION. ALTERNATE MATERIALS CAN BE USED IF THEY ARE IGNITION-RESISTANT AND PASS PERFORMANCE REQUIREMENTS SPECIFIED BY THE STATE FIRE MARSHAL.

UNDERFLOOR AND APPENDAGES. CBC 707A.8 / CRC R337.7.8
EXPOSED UNDERFLOORS, UNDERSIDE OF CANTILEVERED AND OVERHANGING DECKS, BALCONIES AND SIMILAR APPENDAGES SHALL BE NON-COMBUSTIBLE, IGNITION RESISTANT, 5/8" TYPE X GYPSUM SHEATHING BEHIND EXTERIOR COVERING, EXTERIOR PORTION OF 1-HR ASSEMBLY, MEET PERFORMANCE CRITERIA SFM STANDARD 12-7A-3 OR BE ENCLOSED TO GRADE.

ACCESSORY BUILDINGS AND MISCELLANEOUS STRUCTURES. CBC 710A
GROUP U OCCUPANCY ACCESSORY BUILDINGS AND MISCELLANEOUS STRUCTURES THAT HAVE THE POTENTIAL TO POSE A SIGNIFICANT EXTERIOR FIRE EXPOSURE HAZARD DURING WILDFIRES SHALL BE CONSTRUCTED TO CONFORM TO THE IGNITION-RESISTANCE REQUIREMENTS OF THIS SECTION.

NOT FOR CONSTRUCTION

workbench
189 WALNUT AVENUE
SANTA CRUZ, CA 95060
WORKBENCHBUILT.COM
P: 831.227.2217

BY USING THESE PRE-DESIGNED ADU PLANS, THE RECIPIENT IS ACKNOWLEDGING ACCEPTANCE OF THE FOLLOWING CONDITIONS.

1. THE USE OF THIS INFORMATION IS RESTRICTED TO THE ORIGINAL PROJECT FOR WHICH IT WAS PREPARED (THE PRE-DESIGNED ADU PLANS FOR THE COUNTY OF PLUMAS CALIFORNIA). USE OF THESE PLANS DOES NOT ELIMINATE OR REDUCE THE RECIPIENT'S RESPONSIBILITY TO VERIFY ANY AND ALL INFORMATION RELEVANT TO THE RECIPIENT'S WORK AND RESPONSIBILITY ON THIS PROJECT. WORKBENCH AND/OR THE COUNTY OF PLUMAS SHALL NOT BE RESPONSIBLE FOR TRANSLATION ERRORS.

2. THE RECIPIENT RECOGNIZES AND ACKNOWLEDGES THAT THE USE OF THIS INFORMATION WILL BE AT THEIR SOLE RISK AND WITHOUT ANY LIABILITY OR LEGAL EXPOSURE TO WORKBENCH OR THE COUNTY OF PLUMAS. NO WARRANTIES OF ANY NATURE, WHETHER EXPRESS OR IMPLIED, SHALL ATTACH TO THESE DOCUMENTS AND THE INFORMATION CONTAINED THEREON. ANY USE, REUSE, OR ALTERATION OF THESE DOCUMENTS BY THE RECIPIENT OR BY OTHERS WILL BE AT THE RECIPIENT'S RISK AND FULL LEGAL RESPONSIBILITY. FURTHERMORE, THE RECIPIENT WILL, TO THE FULLEST EXTENT PERMITTED BY LAW, INDEMNIFY AND HOLD WORKBENCH AND THE COUNTY OF PLUMAS HARMLESS FROM ANY AND ALL CLAIMS, SUITS, LIABILITY, DEMANDS, JUDGEMENTS, OR COSTS ARISING OUT OF OR RESULTING THERE FROM ON ACCOUNT OF ANY INJURY, DEATH, DAMAGE OR LOSS TO PERSONS OR PROPERTY.

3 THE DESIGNS REPRESENTED BY THESE PLANS ARE COPYRIGHTED AND SUBJECT TO COPYRIGHT PROTECTION. IF THE RECIPIENT DOES NOT AGREE WITH THE ABOVE CONDITIONS, THE RECIPIENT SHOULD NOT PROCEED BEYOND THIS DISCLAIMER.

PLUMAS COUNTY
PRE-DESIGNED ADU
PLAN C- TWO BEDROOM ADU
990 GSF

NOT FOR CONSTRUCTION

GENERAL NOTES - TYPE C

G1.0

SCALE : AS NOTED

12/14/2023 10:30:28 AM

2022 CALIFORNIA GREEN BUILDING STANDARDS CODE

RESIDENTIAL MANDATORY MEASURES, SHEET 1 (January 2023)

AIA California

Y = YES
N/A = NOT APPLICABLE
RESPON. PARTY = RESPONSIBLE PARTY (ie: ARCHITECT, ENGINEER, OWNER, CONTRACTOR, INSPECTOR ETC.)

Y | N/A | RESPON. PARTY

CHAPTER 3
GREEN BUILDING
SECTION 301 GENERAL

301.1 SCOPE. Buildings shall be designed to include the green building measures specified as mandatory in the application checklists contained in this code. Voluntary green building measures are also included in the application checklists and may be included in the design and construction of structures covered by this code, but are not required unless adopted by a city, county, or city and county as specified in Section 101.7.

301.1.1 Additions and alterations. [HCD] The mandatory provisions of Chapter 4 shall be applied to additions or alterations of existing residential buildings where the addition or alteration increases the building's conditioned area, volume, or size. The requirements shall apply only to and/or within the specific area of the addition or alteration.

The mandatory provision of Section 4.106.4.2 may apply to additions or alterations of existing parking facilities or the addition of new parking facilities serving existing multifamily buildings. See Section 4.106.4.3 for application.

Note: Repairs including, but not limited to, resurfacing, restriping and repairing or maintaining existing lighting fixtures are not considered alterations for the purpose of this section.

Note: On and after January 1, 2014, residential buildings undergoing permitted alterations, additions, or improvements shall replace noncompliant plumbing fixtures with water-conserving plumbing fixtures. Plumbing fixture replacement is required prior to issuance of a certificate of final completion, certificate of occupancy or final permit approval by the local building department. See Civil Code Section 1101.1, et seq., for the definition of a noncompliant plumbing fixture, types of residential buildings affected and other important enactment dates.

301.2 LOW-RISE AND HIGH-RISE RESIDENTIAL BUILDINGS. [HCD] The provisions of individual sections of CALGreen may apply to either low-rise residential buildings high-rise residential buildings, or both. Individual sections will be designated by banners to indicate where the section applies specifically to low-rise only (LR) or high-rise only (HR). When the section applies to both low-rise and high-rise buildings, no banner will be used.

SECTION 302 MIXED OCCUPANCY BUILDINGS

302.1 MIXED OCCUPANCY BUILDINGS. In mixed occupancy buildings, each portion of a building shall comply with the specific green building measures applicable to each specific occupancy.
Exceptions:
1. [HCD] Accessory structures and accessory occupancies serving residential buildings shall comply with Chapter 4 and Appendix A4, as applicable.
2. [HCD] For purposes of *CAL*Green, live/work units, complying with Section 419 of the *California Building Code*, shall not be considered mixed occupancies. Live/Work units shall comply with Chapter 4 and Appendix A4, as applicable.

DIVISION 4.1 PLANNING AND DESIGN

ABBREVIATION DEFINITIONS:

HCD	Department of Housing and Community Development
BSC	California Building Standards Commission
DSA-SS	Division of the State Architect, Structural Safety
OSHPD	Office of Statewide Health Planning and Development
LR	Low Rise
HR	High Rise
AA	Additions and Alterations
N	New

CHAPTER 4
RESIDENTIAL MANDATORY MEASURES

SECTION 4.102 DEFINITIONS
4.102.1 DEFINITIONS
The following terms are defined in Chapter 2 *(and are included here for reference)*

FRENCH DRAIN. A trench, hole or other depressed area loosely filled with rock, gravel, fragments of brick or similar pervious material used to collect or channel drainage or runoff water.

WATTLES. Wattles are used to reduce sediment in runoff. Wattles are often constructed of natural plant materials such as hay, straw or similar material shaped in the form of tubes and placed on a downflow slope. Wattles are also used for perimeter and inlet controls.

4.106 SITE DEVELOPMENT

4.106.1 GENERAL. Preservation and use of available natural resources shall be accomplished through evaluation and careful planning to minimize negative effects on the site and adjacent areas. Preservation of slopes, management of storm water drainage and erosion controls shall comply with this section.

4.106.2 STORM WATER DRAINAGE AND RETENTION DURING CONSTRUCTION. Projects which disturb less than one acre of soil and are not part of a larger common plan of development which in total disturbs one acre or more, shall manage storm water drainage during construction. In order to manage storm water drainage during construction, one or more of the following measures shall be implemented to prevent flooding of adjacent property, prevent erosion and retain soil runoff on the site.

1. Retention basins of sufficient size shall be utilized to retain storm water on the site.
2. Where storm water is conveyed to a public drainage system, collection point, gutter or similar disposal method, water shall be filtered by use of a barrier system, wattle or other method approved by the enforcing agency.
3. Compliance with a lawfully enacted storm water management ordinance.

Note: Refer to the State Water Resources Control Board for projects which disturb one acre or more of soil, or are part of a larger common plan of development which in total disturbs one acre or more of soil.

(Website: https://www.waterboards.ca.gov/water_issues/programs/stormwater/construction.html)

4.106.3 GRADING AND PAVING. Construction plans shall indicate how the site grading or drainage system will manage all surface water flows to keep water from entering buildings. Examples of methods to manage surface water include, but are not limited to, the following:

1. Swales
2. Water collection and disposal systems
3. French drains
4. Water retention gardens
5. Other water measures which keep surface water away from buildings and aid in groundwater recharge.

Exception: Additions and alterations not altering the drainage path.

4.106.4 Electric vehicle (EV) charging for new construction. New construction shall comply with Sections 4.106.4.1 or 4.106.4.2 to facilitate future installation and use of EV chargers. Electric vehicle supply equipment (EVSE) shall be installed in accordance with the *California Electrical Code,* Article 625.

Exceptions:
1. On a case-by-case basis, where the local enforcing agency has determined EV charging and infrastructure are not feasible based upon one or more of the following conditions:
1.1 Where there is no local utility power supply or the local utility is unable to supply adequate power.
1.2 Where there is evidence suitable to the local enforcing agency substantiating that additional local utility infrastructure design requirements, directly related to the implementation of Section 4.106.4, may adversely impact the construction cost of the project.
2. Accessory Dwelling Units (ADU) and Junior Accessory Dwelling Units (JADU) without additional parking facilities.

4.106.4.1 New one- and two-family dwellings and townhouses with attached private garages. For each dwelling unit, install a listed raceway to accommodate a dedicated 208/240-volt branch circuit. The raceway shall not be less than trade size 1 (nominal 1-inch inside diameter). The raceway shall originate at the main service or subpanel and shall terminate into a listed cabinet, box or other enclosure in close proximity to the proposed location of an EV charger. Raceways are required to be continuous at enclosed, inaccessible or concealed areas and spaces. The service panel and/or subpanel shall provide capacity to install a 40-ampere 208/240-volt minimum dedicated branch circuit and space(s) reserved to permit installation of a branch circuit overcurrent protective device.

Exemption: A raceway is not required if a minimum 40-ampere 208/240-volt dedicated EV branch circuit is installed in close proximity to the proposed location of an EV charger at the time of original construction in accordance with the *California Electrical Code.*

4.106.4.1.1 Identification. The service panel or subpanel circuit directory shall identify the overcurrent protective device space(s) reserved for future EV charging as "EV CAPABLE". The raceway termination location shall be permanently and visibly marked as "EV CAPABLE".

4.106.4.2 New multifamily dwellings, hotels and motels and new residential parking facilities.
When parking is provided, parking spaces for new multifamily dwellings, hotels and motels shall meet the requirements of Sections 4.106.4.2.1 and 4.106.4.2.2. Calculations for spaces shall be rounded up to the nearest whole number. A parking space served by electric vehicle supply equipment or designed as a future EV charging space shall count as at least one standard automobile parking space only for the purpose of complying with any applicable minimum parking space requirements established by a local jurisdiction. See Vehicle Code Section 22511.2 for further details.

4.106.4.2.1Multifamily development projects with less than 20 dwelling units; and hotels and motels with less than 20 sleeping units or guest rooms.
The number of dwelling units, sleeping units or guest rooms shall be based on all buildings on a project site subject to this section.

1.EV Capable. Ten (10) percent of the total number of parking spaces on a building site, provided for all types of parking facilities, shall be electric vehicle charging spaces (EV spaces) capable of supporting future Level 2 EVSE. Electrical load calculations shall demonstrate that the electrical panel service capacity and electrical system, including any on-site distribution transformer(s), have sufficient capacity to simultaneously charge all EVs at all required EV spaces at a minimum of 40 amperes.

The service panel or subpanel circuit directory shall identify the overcurrent protective device space(s) reserved for future EV charging purposes as "EV CAPABLE" in accordance with the California Electrical Code.

Exceptions:

1.When EV chargers (Level 2 EVSE) are installed in a number equal to or greater than the required number of EV capable spaces.

2.When EV chargers (Level 2 EVSE) are installed in a number less than the required number of EV capable spaces, the number of EV capable spaces required may be reduced by a number equal to the number of EV chargers installed.

Notes:

a.Construction documents are intended to demonstrate the project's capability and capacity for facilitating future EV charging.

b.There is no requirement for EV spaces to be constructed or available until receptacles for EV charging or EV chargers are installed for use.

2.EV Ready. Twenty-five (25) percent of the total number of parking spaces shall be equipped with low power Level 2 EV charging receptacles. For multifamily parking facilities, no more than one receptacle is required per dwelling unit when more than one parking space is provided for use by a single dwelling unit.

Exception: Areas of parking facilities served by parking lifts.

4.106.4.2.2 Multifamily development projects with 20 or more dwelling units, hotels and motels with 20 or more sleeping units or guest rooms.
The number of dwelling units, sleeping units or guest rooms shall be based on all buildings on a project site subject to this section.

1.EV Capable. Ten (10) percent of the total number of parking spaces on a building site, provided for all types of parking facilities, shall be electric vehicle charging spaces (EV spaces) capable of supporting future Level 2 EVSE. Electrical load calculations shall demonstrate that the electrical panel service capacity and electrical system, including any on-site distribution transformer(s), have sufficient capacity to simultaneously charge a[illegible] EVs at all required EV spaces at a minimum of 40 amperes.

The service panel or subpanel circuit directory shall identify the overcurrent protecti[illegible] space(s) reserve[illegible] for future EV charging purposes as "EV CAPABLE" in accordance with the C[illegible]ectrical Code.

Exception: When EV chargers (Level 2 EVSE) are installed i[illegible] number greater t[illegible]ve (5) percent of parking spaces required by Section 4.106.4.2.2, Item [illegible]f EV capable [illegible]es required may be reduced by a number equal to the number of EV c[illegible]s installe[illegible] the five (5) [illegible]ent required.

Notes:

a.Construction docu[illegible]all show l[illegible]ons o[illegible]re EV spaces.

b.There is no requirem[illegible] con[illegible]d or avail[illegible]until receptacles for EV charging or EV chargers are installe[illegible] us[illegible]

2.EV Ready. Twenty-five (25[illegible]cent of [illegible]umber of parking spaces shall be equipped with low power Level 2 EV charging receptac[illegible] For multifa[illegible]king facilities, no more than one receptacle is requir[illegible] dwelling unit when more than o[illegible]arking space is provided for use by a single dwelling unit.

Exception: Areas of parking facilities served by parking lifts.

3.EV Chargers. Five (5) percent of the total number of parking spaces shall [illegible]equip[illegible]ith Level 2 [illegible] Where common use parking is provided, at least one EV char[illegible] located in th[illegible]mmon use pa[illegible] area and shall be available for use by all residents or gues[illegible]

When low power Level 2 EV charging recepta[illegible]or Le[illegible]EVSE are installed beyond [illegible]inimum requ[illegible] an automatic load management system (ALMS[illegible]y be [illegible]aximum req[illegible]electrical capacity to each space serve[illegible] ALMS. T[illegible]ectrica[illegible]site distribu[illegible]ansformers shall have sufficient capacity t[illegible]t least 3[illegible]V simultaneously to ea[illegible]V charging [illegible]on (EVCS) served by the [illegible] The bran[illegible]all hav[illegible]inimum capacity of 4[illegible]mperes, and installed EVSE shall have a c[illegible] than [illegible]mp[illegible]ALM[illegible]all not [illegible]used t[illegible]e the minimum required electrical capaci[illegible]e requir[illegible]capa[illegible]paces.

4.106.4[illegible] Electric vehi[illegible]argi[illegible]tations ([illegible]
[illegible]ctric[illegible]cle charging sta[illegible]requi[illegible]y Section 4.[illegible]6.4.2.2, Item 3, shall comply with Section 4.106.4.2.2.1.

Excepti[illegible]lectric vehicle[illegible]ging sta[illegible]s serving public accommodations, public housing, motels and hotels shall not[illegible]uired to c[illegible]y with this section. See California Building Code, Chapter 11B, for applicable requireme[illegible]

4.[illegible].2.2.1.1 Location.
[illegible] shall comply with at least one of the following options:

1.The charging space shall be located adjacent to an accessible parking space meeting the requirements of the California Building Code, Chapter 11A, to allow use of the EV charger from the accessible parking space.

2.The charging space shall be located on an accessible route, as defined in the California Building Code, Chapter 2, to the building.

Exception: Electric vehicle charging stations designed and constructed in compliance with the California Building Code, Chapter 11B, are not required to comply with Section 4.106.4.2.2.1.1 and Section 4.106.4.2.2.1.2, Item 3.

4.106.4.2.2.1.2 Electric vehicle charging stations (EVCS) dimensions.
The charging spaces shall be designed to comply with the following:

1.The minimum length of each EV space shall be 18 feet (5486 mm).

2.The minimum width of each EV space shall be 9 feet (2743 mm).

3.One in every 25 charging spaces, but not less than one, shall also have an 8-foot (2438 mm) wide minimum aisle. A 5-foot (1524 mm) wide minimum aisle shall be permitted provided the minimum width of the EV space is 12 feet (3658 mm).

a.Surface slope for this EV space and the aisle shall not exceed 1 unit vertical in 48 units horizontal (2.083 percent slope) in any direction.

4.106.4.2.2.1.3 Accessible EV spaces.
In addition to the requirements in Sections 4.106.4.2.2.1.1 and 4.106.4.2.2.1.2, all EVSE, when installed, shall comply with the accessibility provisions for EV chargers in the California Building Code, Chapter 11B. EV ready spaces and EVCS in multifamily developments shall comply with California Building Code, Chapter 11A, Section 1109A.

4.106.4.2.3 EV space requirements.
1.Single EV space required. Install a listed raceway capable of accommodating a 208/240-volt dedicated branch circuit. The raceway shall not be less than trade size 1 (nominal 1-inch inside diameter). The raceway shall originate at the main service or subpanel and shall terminate into a listed cabinet, box or enclosure in close proximity to the location or the proposed location of the EV space. Construction documents shall identify the raceway termination point, receptacle or charger location, as applicable. The service panel and/ or subpanel shall have a 40-ampere minimum dedicated branch circuit, including branch circuit overcurrent protective device installed, or space(s) reserved to permit installation of a branch circuit overcurrent protective device.

Exception: A raceway is not required if a minimum 40-ampere 208/240-volt dedicated EV branch circuit is installed in close proximity to the location or the proposed location of the EV space, at the time of original construction in accordance with the California Electrical Code.

2.Multiple EV spaces required. Construction documents shall indicate the raceway termination point and the location of installed or future EV spaces, receptacles or EV chargers. Construction documents shall also provide information on amperage of installed or future receptacles or EVSE, raceway method(s), wiring schematics and electrical load calculations. Plan design shall be based upon a 40-ampere minimum branch circuit. Required raceways and related components that are planned to be installed underground, enclosed, inaccessible or in concealed areas and spaces shall be installed at the time of original construction.

Exception: A raceway is not required if a minimum 40-ampere 208/240-volt dedicated EV branch circuit is installed in close proximity to the location or the proposed location of the EV space at the time of original construction in accordance with the California Electrical Code.

4.106.4.2.4 Identification.
The service panel or subpanel circuit directory shall identify the overcurrent protective device space(s) reserved for future EV charging purposes as "EV CAPABLE" in accordance with the California Electrical Code.

4.106.4.2.5 Electric Vehicle Ready Space Signage.
Electric vehicle ready spaces shall be identified by signage or pavement markings, in compliance with Caltrans Traffic Operations Policy Directive 13-01 (Zero Emission Vehicle Signs and Pavement Markings) or its successor(s).

4.106.4.3 Electric vehicle charging for additions and alterations of parking facilities serving existing multifamily buildings.
When new parking facilities are added, or electrical systems or lighting of existing parking facilities are added or altered and the work requires a building permit, ten (10) percent of the total number of parking spaces added or altered shall be electric vehicle charging spaces (EV spaces) capable of supporting future Level 2 EVSE.

Notes:

1.Construction documents are intended to demonstrate the project's capability and capacity for facilitating future EV charging.

2.There is no requirement for EV spaces to be constructed or available until EV chargers are installed for use.

DIVISION 4.2 ENERGY EFFICIENCY

4.201 GENERAL
4.201.1 SCOPE. For the purposes of mandatory energy efficiency standards in this code, the California Energy Commission will continue to adopt mandatory standards.

DIVISION 4.3 WATER EFFICIENCY AND CONSERVATION

4.303 INDOOR WATER USE
4.303.1 WATER CONSERVING PLUMBING FIXTURES AND FITTINGS. Plumbing fixtures (water closets and urinals) and fittings (faucets and showerheads) shall comply with the sections 4.303.1.1, 4.303.1.2, 4.303.1.3, and 4.303.4.4.

Note: All noncompliant plumbing fixtures in any residential real property shall be replaced with water-conserving plumbing fixtures. Plumbing fixture replacement is required prior to issuance of a certificate of final completion, certificate of occupancy, or final permit approval by the local building department. See Civil Code Section 1101.1, et seq., for the definition of a noncompliant plumbing fixture, types of residential buildings affected and other important enactment dates.

4.303.1.1 Water Closets. The effective flush volume of all water closets shall not exceed 1.28 gallons per flush. Tank-type water close[illegible]e certified to the performance criteria of the U.S. EPA WaterSense Specification for Tank-[illegible]

Note: The e[illegible]ve flush volu[illegible]f dual flush toilets is defined as the composite, average flush volume [illegible] reduce[illegible]shes and o[illegible]ll flush.

4.303.1.2 [illegible]ls. T[illegible]lume of wall mounted urinals shall not exceed 0.125 gallons per flush. The effectiv[illegible] vol[illegible] all othe[illegible] shall not exceed 0.5 gallons per flush.

4.303.1.3 Sh[illegible]head[illegible]

4.303[illegible] Single [illegible]howerhead. Showerheads shall have a maxim[illegible]f not m[illegible] gall[illegible]r minute at 80 psi. Showerheads shall be certified to the[illegible]ia of [illegible].S. [illegible] [illegible]ense Specification for Showerheads.

4.303.1.3.2 Multiple showerheads servin[illegible] sh[illegible] Wh[illegible] shower is serve[illegible] more [illegible] one showerhead, the combined flow rate [illegible]owe[illegible]s an[illegible]ther shower out[illegible]contro[illegible]y a single valve shall not excee[illegible] per minute [illegible] psi, [illegible] shower shall [illegible]esigned [illegible]nly allow one shower outlet to b[illegible]per[illegible]at a time.

Not[illegible] [illegible]hower shall [illegible]nsidered a s[illegible]rhead.

4.3[illegible]1.4 Fa[illegible]

[illegible]303.1[illegible] Residential Lavatory Faucet[illegible] [illegible]e maximum flow rate of residential lavatory faucets shall [illegible] exc[illegible] 2 gallons per [illegible]e at 60 psi. [illegible] minimum flow rate of residential lavatory faucets shall [illegible]be le[illegible]n 0.8 gallon[illegible] minute at 20 psi.

[illegible].1.4.2 [illegible]ets in Common and Public Use Areas. The maximum flow rate of lavatory f[illegible]s installed [illegible]ommon and public use areas (outside of dwellings or sleeping units) in residential [illegible]ngs shall not exceed 0.5 gallons per minute at 60 psi.

4.303.1.4.3 Metering Faucets. Metering faucets when installed in residential buildings shall not deliver more than 0.2 gallons per cycle.

4.303.1.4.4 Kitchen Faucets. The maximum flow rate of kitchen faucets shall not exceed 1.8 gallons per minute at 60 psi. Kitchen faucets may temporarily increase the flow above the maximum rate, but not to exceed 2.2 gallons per minute at 60 psi, and must default to a maximum flow rate of 1.8 gallons per minute at 60 psi.

Note: Where complying faucets are unavailable, aerators or other means may be used to achieve reduction.

4.303.1.4.5 Pre-rinse spray valves.
When installed, shall meet the requirements in the *California Code of Regulations*, Title 20 (Appliance Efficiency Regulations), Sections 1605.1 (h)(4) Table H-2, Section 1605.3 (h)(4)(A), and Section 1607 (d)(7) and shall be equipped with an integral automatic shutoff.

FOR REFERENCE ONLY: The following table and code section have been reprinted from the *California Code of Regulations*, Title 20 (Appliance Efficiency Regulations),Section 1605.1 (h)(4) and Section 1605.3 (h)(4)(A).

TABLE H-2

STANDARDS FOR COMMERCIAL PRE-RINSE SPRAY VALUES MANUFACTURED ON OR AFTER JANUARY 28, 2019

PRODUCT CLASS [spray force in ounce force (ozf)]	MAXIMUM FLOW RATE (gpm)
Product Class 1 (≤ 5.0 ozf)	1.00
Product Class 2 (> 5.0 ozf and ≤ 8.0 ozf)	1.20
Product Class 3 (> 8.0 ozf)	1.28

Title 20 Section 1605.3 (h)(4)(A): Commercial prerinse spray values manufactured on or after January 1, 2006, shall have a minimum spray force of not less than 4.0 ounces-force (ozf)[113 grams-force(gf)]

4.303.2 Submeters for multifamily buildings and dwelling units in mixed-used residential/commercial buildings.
Submeters shall be installed to measure water usage of individual rental dwelling units in accordance with the *California Plumbing Code*.

4.303.3 Standards for plumbing fixtures and fittings. Plumbing fixtures and fittings shall be installed in accordance with the *California Plumbing Code*, and shall meet the applicable standards referenced in Table 1701.1 of the *California Plumbing Code*.

NOTE:
THIS TABLE COMPILES THE DATA IN SECTION 4.303.1, AND IS INCLUDED AS A CONVENIENCE FOR THE USER.

TABLE - MAXIMUM FIXTURE WATER USE

FIXTURE TYPE	FLOW RATE
SHOWER HEADS (RESIDENTIAL)	1.8 GMP @ 80 PSI
LAVATORY FAUCETS (RESIDENTIAL)	MAX. 1.2 GPM @ 60 PSI MIN. 0.8 GPM @ 20 PSI
LAVATORY FAUCETS IN COMMON & PUBLIC USE AREAS	0.5 GPM @ 60 PSI
KITCHEN FAUCETS	1.8 GPM @ 60 PSI
METERING FAUCETS	0.2 GAL/CYCLE
WATER CLOSET	1.28 GAL/FLUSH
URINALS	0.125 GAL/FLUSH

4.304 OUTDOOR WATER USE
4.304.1 OUTDOOR POTABLE WATER USE IN LANDSCAPE AREAS. Residential developments shall comply with a local water efficient landscape ordinance or the current California Department of Water Resources' Model Water Efficient Landscape Ordinance (MWELO), whichever is more stringent.

NOTES:

1. The Model Water Efficient Landscape Ordinance (MWELO) is located in the *California Code Regulations,* Title 23, Chapter 2.7, Division 2. MWELO and supporting documents, including water budget calculator, are available at: https://www.water.ca.gov/

DIVISION 4.4 MATERIAL CONSERVATION AND RESOURCE EFFICIENCY

4.406 ENHANCED DURABILITY AND REDUCED MAINTENANCE
4.406.1 RODENT PROOFING. Annular spaces around pipes, electric cables, conduits or other openings in sole/bottom plates at exterior walls shall be protected against the passage of rodents by closing such openings with cement mortar, concrete masonry or a similar method acceptable to the enforcing agency.

4.408 CONSTRUCTION WASTE REDUCTION, DISPOSAL AND RECYCLING
4.408.1 CONSTRUCTION WASTE MANAGEMENT. Recycle and/or salvage for reuse a minimum of 65 percent of the non-hazardous construction and demolition waste in accordance with either Section 4.408.2, 4.408.3 or 4.408.4, or meet a more stringent local construction and demolition waste management ordinance.

Exceptions:

1. Excavated soil and land-clearing debris.
2. Alternate waste reduction methods developed by working with local agencies if diversion or recycle facilities capable of compliance with this item do not exist or are not located reasonably close to the jobsite.
3. The enforcing agency may make exceptions to the requirements of this section when isolated jobsites are located in areas beyond the haul boundaries of the diversion facility.

4.408.2 CONSTRUCTION WASTE MANAGEMENT PLAN. Submit a construction waste management plan in conformance with Items 1 through 5. The construction waste management plan shall be updated as necessary and shall be available during construction for examination by the enforcing agency.

1. Identify the construction and demolition waste materials to be diverted from disposal by recycling, reuse on the project or salvage for future use or sale.
2. Specify if construction and demolition waste materials will be sorted on-site (source separated) or bulk mixed (single stream).
3. Identify diversion facilities where the construction and demolition waste material collected will be taken.
4. Identify construction methods employed to reduce the amount of construction and demolition waste generated.
5. Specify that the amount of construction and demolition waste materials diverted shall be calculated by weight or volume, but not by both.

4.408.3 WASTE MANAGEMENT COMPANY. Utilize a waste management company, approved by the enforcing agency, which can provide verifiable documentation that the percentage of construction and demolition waste material diverted from the landfill complies with Section 4.408.1.

Note: The owner or contractor may make the determination if the construction and demolition waste materials will be diverted by a waste management company.

4.408.4 WASTE STREAM REDUCTION ALTERNATIVE [LR]. Projects that generate a total combined weight of construction and demolition waste disposed of in landfills, which do not exceed 3.4 lbs./sq.ft. of the building area shall meet the minimum 65% construction waste reduction requirement in Section 4.408.1

4.408.4.1 WASTE STREAM REDUCTION ALTERNATIVE. Projects that generate a total combined weight of construction and demolition waste disposed of in landfills, which do not exceed 2 pounds per square foot of the building area, shall meet the minimum 65% construction waste reduction requirement in Section 4.408.1

4.408.5 DOCUMENTATION. Documentation shall be provided to the enforcing agency which demonstrates compliance with Section 4.408.2, items 1 through 5, Section 4.408.3 or Section 4.408.4..

Notes:

1. Sample forms found in "A Guide to the California Green Building Standards Code (Residential)" located at www.hcd.ca.gov/CALGreen.html may be used to assist in documenting compliance with this section.
2. Mixed construction and demolition debris (C & D) processors can be located at the California Department of Resources Recycling and Recovery (CalRecycle).

4.410 BUILDING MAINTENANCE AND OPERATION
4.410.1 OPERATION AND MAINTENANCE MANUAL. At the time of final inspection, a manual, compact disc, web-based reference or other media acceptable to the enforcing agency which includes all of the following shall be placed in the building:

1. Directions to the owner or occupant that the manual shall remain with the building throughout the life cycle of the structure.
2. Operation and maintenance instructions for the following:
   a. Equipment and appliances, including water-saving devices and systems, HVAC systems, photovoltaic systems, electric vehicle chargers, water-heating systems and other major appliances and equipment.
   b. Roof and yard drainage, including gutters and downspouts.
   c. Space conditioning systems, including condensers and air filters.
   d. Landscape irrigation systems.
   e. Water reuse systems.
3. Information from local utility, water and waste recovery providers on methods to further reduce resource consumption, including recycle programs and locations.
4. Public transportation and/or carpool options available in the area.
5. Educational material on the positive impacts of an interior relative humidity between 30-60 percent and what methods an occupant may use to maintain the relative humidity level in that range.
6. Information about water-conserving landscape and irrigation design and controllers which conserve water.
7. Instructions for maintaining gutters and downspouts and the importance of diverting water at least 5 feet away from the foundation.
8. Information on required routine maintenance measures, including, but not limited to, caulking, painting, grading around the building, etc.
9. Information about state solar energy and incentive programs available.
10. A copy of all special inspections verifications required by the enforcing agency or this code.
11. Information from the Department of Forestry and Fire Protection on maintenance of defensible space around residential structures.
12. Information and/or drawings identifying the location of grab bar reinforcements.

4.410.2 RECYCLING BY OCCUPANTS. Where 5 or more multifamily dwelling units are constructed on a building site, provide readily accessible area(s) that serves all buildings on the site and are identified for the depositing, storage and collection of non-hazardous materials for recycling, including (at a minimum) paper, corrugated cardboard, glass, plastics, organic waster, and metals, or meet a lawfully enacted local recycling ordinance, if more restrictive.

Exception: Rural jurisdictions that meet and apply for the exemption in Public Resources Code Section 42649.82 (a)(2)(A) et seq. are note required to comply with the organic waste portion of this section.

DIVISION 4.5 ENVIRONMENTAL QUALITY

SECTION 4.501 GENERAL
4.501.1 Scope
The provisions of this chapter shall outline means of reducing the quality of air contaminants that are odorous, irritating and/or harmful to the comfort and well being of a building's installers, occupants and neighbors.

SECTION 4.502 DEFINITIONS
5.102.1 DEFINITIONS
The following terms are defined in Chapter 2 *(and are included here for reference)*

AGRIFIBER PRODUCTS. Agrifiber products include wheatboard, strawboard, panel substrates and door cores, not including furniture, fixtures and equipment (FF&E) not considered base building elements.

COMPOSITE WOOD PRODUCTS. Composite wood products include hardwood plywood, particleboard and medium density fiberboard. "Composite wood products" does not include hardboard, structural plywood, structural panels, structural composite lumber, oriented strand board, glued laminated timber, prefabricated wood I-joists or finger-jointed lumber, all as specified in California Code of regulations (CCR), title 17, Section 93120.1.

DIRECT-VENT APPLIANCE. A fuel-burning appliance with a sealed combustion system that draws all air for combustion from the outside atmosphere and discharges all flue gases to the outside atmosphere.

DISCLAIMER:THIS DOCUMENT IS PROVIDED AND INTENDED TO BE USED AS A MEANS TO INDICATE AREAS OF COMPLIANCE WITH THE CALIFORNIA GREEN BUILDING STANDARDS (CALGREEN) CODE. DUE TO THE VARIABLES BETWEEN BUILDING DEPARTMENT JURISDICTIONS, THIS CHECKLIST IS TO BE USED ON AN INDIVIDUAL PROJECT BASIS AND MAY BE MODIFIED BY THE END USER TO MEET THOSE INDIVIDUAL NEEDS. THE END USER ASSUMES ALL RESPONSIBILITY ASSOCIATED WITH THE USE OF THIS DOCUMENT, INCLUDING VERIFICATION WITH THE FULL CODE.

NOT FOR CONSTRUCTION

12/14/2023 10:30:28 AM

workbench

189 WALNUT AVENUE
SANTA CRUZ, CA 95060
WORKBENCHBUILT.COM
P: 831.227.2217

BY USING THESE PRE-DESIGNED ADU PLANS, THE RECIPIENT IS ACKNOWLEDGING ACCEPTANCE OF THE FOLLOWING CONDITIONS.

1. THE USE OF THIS INFORMATION IS RESTRICTED TO THE ORIGINAL PROJECT FOR WHICH IT WAS PREPARED (THE PRE-DESIGNED ADU PLANS FOR THE COUNTY OF PLUMAS CALIFORNIA). USE OF THESE PLANS DOES NOT ELIMINATE OR REDUCE THE RECIPIENT'S RESPONSIBILITY TO VERIFY ANY AND ALL INFORMATION RELEVANT TO THE RECIPIENT'S WORK AND RESPONSIBILITY ON THIS PROJECT. WORKBENCH AND/OR THE COUNTY OF PLUMAS SHALL NOT BE RESPONSIBLE FOR TRANSLATION ERRORS.

2. THE RECIPIENT RECOGNIZES AND ACKNOWLEDGES THAT THE USE OF THIS INFORMATION WILL BE AT THEIR SOLE RISK AND WITHOUT ANY LIABILITY OR LEGAL EXPOSURE TO WORKBENCH OR THE COUNTY OF PLUMAS. NO WARRANTIES OF ANY NATURE, WHETHER EXPRESS OR IMPLIED, SHALL ATTACH TO THESE DOCUMENTS AND THE INFORMATION CONTAINED THEREON. ANY USE, REUSE, OR ALTERATION OF THESE DOCUMENTS BY THE RECIPIENT OR BY OTHERS WILL BE AT THE RECIPIENT'S RISK AND FULL LEGAL RESPONSIBILITY. FURTHERMORE, THE RECIPIENT WILL, TO THE FULLEST EXTENT PERMITTED BY LAW, INDEMNIFY AND HOLD WORKBENCH AND THE COUNTY OF PLUMAS HARMLESS FROM ANY AND ALL CLAIMS, SUITS, LIABILITY, DEMANDS, JUDGEMENTS, OR COSTS ARISING OUT OF OR RESULTING THERE FROM ON ACCOUNT OF ANY INJURY, DEATH, DAMAGE OR LOSS TO PERSONS OR PROPERTY.

3 THE DESIGNS REPRESENTED BY THESE PLANS ARE COPYRIGHTED AND SUBJECT TO COPYRIGHT PROTECTION. IF THE RECIPIENT DOES NOT AGREE WITH THE ABOVE CONDITIONS, THE RECIPIENT SHOULD NOT PROCEED BEYOND THIS DISCLAIMER.

PLUMAS COUNTY
PRE-DESIGNED ADU
PLAN C- TWO BEDROOM ADU
990 GSF

NOT FOR CONSTRUCTION

CALGREEN REQUIREMENTS - TYPE C

G2.0

SCALE : AS NOTED

2022 CALIFORNIA GREEN BUILDING STANDARDS CODE
RESIDENTIAL MANDATORY MEASURES, SHEET 2 (January 2023)

Y = YES
N/A = NOT APPLICABLE
RESPON. PARTY = RESPONSIBLE PARTY (ie: ARCHITECT, ENGINEER, OWNER, CONTRACTOR, INSPECTOR ETC.)

MAXIMUM INCREMENTAL REACTIVITY (MIR). The maximum change in weight of ozone formed by adding a compound to the "Base Reactive Organic Gas (ROG) Mixture" per weight of compound added, expressed to hundredths of a gram (g O³/g ROC).
Note: MIR values for individual compounds and hydrocarbon solvents are specified in CCR, Title 17, Sections 94700 and 94701.

MOISTURE CONTENT. The weight of the water in wood expressed in percentage of the weight of the oven-dry wood.

PRODUCT-WEIGHTED MIR (PWMIR). The sum of all weighted-MIR for all ingredients in a product subject to this article. The PWMIR is the total product reactivity expressed to hundredths of a gram of ozone formed per gram of product (excluding container and packaging).
Note: PWMIR is calculated according to equations found in CCR, Title 17, Section 94521 (a).

REACTIVE ORGANIC COMPOUND (ROC). Any compound that has the potential, once emitted, to contribute to ozone formation in the troposphere.

VOC. A volatile organic compound (VOC) broadly defined as a chemical compound based on carbon chains or rings with vapor pressures greater than 0.1 millimeters of mercury at room temperature. These compounds typically contain hydrogen and may contain oxygen, nitrogen and other elements. See CCR Title 17, Section 94508(a).

4.503 FIREPLACES
4.503.1 GENERAL. Any installed gas fireplace shall be a direct-vent sealed-combustion type. Any installed woodstove or pellet stove shall comply with U.S. EPA New Source Performance Standards (NSPS) emission limits as applicable, and shall have a permanent label indicating they are certified to meet the emission limits. Woodstoves, pellet stoves and fireplaces shall also comply with applicable local ordinances.

4.504 POLLUTANT CONTROL
4.504.1 COVERING OF DUCT OPENINGS & PROTECTION OF MECHANICAL EQUIPMENT DURING CONSTRUCTION. At the time of rough installation, during storage on the construction site and until final startup of the heating, cooling and ventilating equipment, all duct and other related air distribution component openings shall be covered with tape, plastic, sheet metal or other methods acceptable to the enforcing agency to reduce the amount of water, dust or debris which may enter the system.

4.504.2 FINISH MATERIAL POLLUTANT CONTROL. Finish materials shall comply with this section.

4.504.2.1 Adhesives, Sealants and Caulks. Adhesives, sealant and caulks used on the project shall meet the requirements of the following standards unless more stringent local or regional air pollution or air quality management district rules apply:

1. Adhesives, adhesive bonding primers, adhesive primers, sealants, sealant primers and caulks shall comply with local or regional air pollution control or air quality management district rules where applicable or SCAQMD Rule 1168 VOC limits, as shown in Table 4.504.1 or 4.504.2, as applicable. Such products also shall comply with the Rule 1168 prohibition on the use of certain toxic compounds (chloroform, ethylene dichloride, methylene chloride, perchloroethylene and tricloroethylene), except for aerosol products, as specified in Subsection 2 below.
2. Aerosol adhesives, and smaller unit sizes of adhesives, and sealant or caulking compounds (in units of product, less packaging, which do not weigh more than 1 pound and do not consist of more than 16 fluid ounces) shall comply with statewide VOC standards and other requirements, including prohibitions on use of certain toxic compounds, of *California Code of Regulations*, Title 17, commencing with section 94507.

4.504.2.2 Paints and Coatings. Architectural paints and coatings shall comply with VOC limits in Table 1 of the ARB Architectural Suggested Control Measure, as shown in Table 4.504.3, unless more stringent local limits apply. The VOC content limit for coatings that do not meet the definitions for the specialty coatings categories listed in Table 4.504.3 shall be determined by classifying the coating as a Flat, Nonflat or Nonflat-High Gloss coating, based on its gloss, as defined in subsections 4.21, 4.36, and 4.37 of the 2007 California Air Resources Board, Suggested Control Measure, and the corresponding Flat, Nonflat or Nonflat-High Gloss VOC limit in Table 4.504.3 shall apply.

4.504.2.3 Aerosol Paints and Coatings. Aerosol paints and coatings shall meet the Product-weighted MIR Limits for ROC in Section 94522(a)(2) and other requirements, including prohibitions on use of certain toxic compounds and ozone depleting substances, in Sections 94522(e)(1) and (f)(1) of *California Code of Regulations*, Title 17, commencing with Section 94520; and in areas under the jurisdiction of the Bay Area Air Quality Management District additionally comply with the percent VOC by weight of product limits of Regulation 8, Rule 49.

4.504.2.4 Verification. Verification of compliance with this section shall be provided at the request of the enforcing agency. Documentation may include, but is not limited to, the following:

1. Manufacturer's product specification.
2. Field verification of on-site product containers.

TABLE 4.504.1 - ADHESIVE VOC LIMIT[1,2]

(Less Water and Less Exempt Compounds in Grams per Liter)

ARCHITECTURAL APPLICATIONS	VOC LIMIT
INDOOR CARPET ADHESIVES	50
CARPET PAD ADHESIVES	50
OUTDOOR CARPET ADHESIVES	150
WOOD FLOORING ADHESIVES	100
RUBBER FLOOR ADHESIVES	60
SUBFLOOR ADHESIVES	50
CERAMIC TILE ADHESIVES	65
VCT & ASPHALT TILE ADHESIVES	50
DRYWALL & PANEL ADHESIVES	50
COVE BASE ADHESIVES	50
MULTIPURPOSE CONSTRUCTION ADHESIVE	70
STRUCTURAL GLAZING ADHESIVES	100
SINGLE-PLY ROOF MEMBRANE ADHESIVES	250
OTHER ADHESIVES NOT LISTED	50
SPECIALTY APPLICATIONS	
PVC WELDING	510
CPVC WELDING	490
ABS WELDING	325
PLASTIC CEMENT WELDING	250
ADHESIVE PRIMER FOR PLASTIC	550
CONTACT ADHESIVE	80
SPECIAL PURPOSE CONTACT ADHESIVE	250
STRUCTURAL WOOD MEMBER ADHESIVE	140
TOP & TRIM ADHESIVE	250
SUBSTRATE SPECIFIC APPLICATIONS	
METAL TO METAL	30
PLASTIC FOAMS	50
POROUS MATERIAL (EXCEPT WOOD)	50
WOOD	30
FIBERGLASS	80

1. IF AN ADHESIVE IS USED TO BOND DISSIMILAR SUBSTRATES TOGETHER, THE ADHESIVE WITH THE HIGHEST VOC CONTENT SHALL BE ALLOWED.

2. FOR ADDITIONAL INFORMATION REGARDING METHODS TO MEASURE THE VOC CONTENT SPECIFIED IN THIS TABLE, SEE SOUTH COAST AIR QUALITY MANAGEMENT DISTRICT RULE 1168.

TABLE 4.504.2 - SEALANT VOC LIMIT

(Less Water and Less Exempt Compounds in Grams per Liter)

SEALANTS	VOC LIMIT
ARCHITECTURAL	250
MARINE DECK	760
NONMEMBRANE ROOF	300
ROADWAY	250
SINGLE-PLY ROOF MEMBRANE	450
OTHER	420
SEALANT PRIMERS	
ARCHITECTURAL	
NON-POROUS	250
POROUS	775
MODIFIED BITUMINOUS	500
MARINE DECK	760
OTHER	750

TABLE 4.504.3 - VOC CONTENT LIMITS FOR ARCHITECTURAL COATINGS[2,3]

GRAMS OF VOC PER LITER OF COATING, LESS WATER & LESS EXEMPT COMPOUNDS

COATING CATEGORY	VOC LIMIT
FLAT COATINGS	50
NON-FLAT COATINGS	100
NONFLAT-HIGH GLOSS COATINGS	150
SPECIALTY COATINGS	
ALUMINUM ROOF COATINGS	400
BASEMENT SPECIALTY COATINGS	400
BITUMINOUS ROOF COATINGS	50
BITUMINOUS ROOF PRIMERS	
BOND BREAKERS	350
CONCRETE CURING COMPOUNDS	350
CONCRETE/MASONRY SEALERS	100
DRIVEWAY SEALERS	50
DRY FOG COATINGS	150
FAUX FINISHING COATINGS	350
FIRE RESISTIVE COATINGS	350
FLOOR COATINGS	100
FORM-RELEASE COMPOUNDS	250
GRAPHIC ARTS COATINGS (SIGN PAINTS)	500
HIGH TEMPERATURE COATINGS	420
INDUSTRIAL MAINTENANCE COATINGS	250
LOW SOLIDS COATINGS[1]	120
MAGNESITE CEMENT COATINGS	450
MASTIC TEXTURE COATINGS	
METALLIC PIGMENTED COATINGS	500
MULTICOLOR COATINGS	250
PRETREATMENT WASH PRIMERS	420
PRIMERS, SEALERS, & UNDERCOATERS	100
REACTIVE PENETRATING SEALERS	350
RECYCLED COATINGS	250
ROOF COATINGS	50
RUST PREVENTATIVE COATINGS	250
SHELLACS	
CLEAR	730
OPAQUE	550
SPECIALTY PRIMERS, SEALERS & UNDERCOATERS	100
STAINS	250
STONE CONSOLIDANTS	450
SWIMMING POOL COATINGS	340
TRAFFIC MARKING COATINGS	100
TUB & TILE REFINISH COATINGS	420
WATERPROOFING MEMBRANES	250
WOOD COATINGS	275
WOOD PRESERVATIVES	350
ZINC-RICH PRIMERS	340

1. GRAMS OF VOC PER LITER OF COATING, INCLUDING WATER & EXEMPT COMPOUNDS

2. THE SPECIFIED LIMITS REMAIN IN EFFECT UNLESS REVISED LIMITS ARE LISTED IN SUBSEQUENT COLUMNS IN THE TABLE.

3. VALUES IN THIS TABLE ARE DERIVED FROM THOSE SPECIFIED BY THE CALIFORNIA AIR RESOURCES BOARD, ARCHITECTURAL COATINGS SUGGESTED CONTROL MEASURE, FEB. 1, 2008. MORE INFORMATION IS AVAILABLE FROM THE AIR RESOURCES BOARD.

TABLE 4.504.5 - FORMALDEHYDE LIMITS[1]

MAXIMUM FORMALDEHYDE EMISSIONS IN PARTS PER MILLION

PRODUCT	CURRENT LIMIT
HARDWOOD PLYWOOD VENEER CORE	0.05
HARDWOOD PLYWOOD COMPOSITE CORE	0.05
PARTICLE BOARD	0.09
MEDIUM DENSITY FIBERBOARD	0.11
THIN MEDIUM DENSITY FIBERBOARD[2]	0.13

1. VALUES IN THIS TABLE ARE DERIVED FROM THOSE SPECIFIED BY THE CALIF. AIR RESOURCES BOARD, AIR TOXICS CONTROL MEASURE FOR COMPOSITE WOOD AS TESTED IN ACCORDANCE WITH ASTM E 1333. FOR ADDITIONAL INFORMATION, SEE CALIF. CODE OF REGULATIONS, TITLE 17, SECTIONS 93120 THROUGH 93120.12.

2. THIN MEDIUM DENSITY FIBERBOARD HAS A MAXIMUM THICKNESS OF 5/16" (8 MM).

DIVISION 4.5 ENVIRONMENTAL QUALITY (continued)
4.504.3 CARPET SYSTEMS. All carpet installed in the building interior shall meet the requirements of the California Department of Public Health, "Standard Method for the Testing and Evaluation of Volatile Organic Chemical Emissions from Indoor Sources Using Environmental Chambers," Version 1.2, January 2017 (Emission testing method for California Specification 01350)

See California Department of Public Health's website for certification programs and testing labs.

https://www.cdph.ca.gov/Programs/CCDPHP/DEODC/EHLB/IAQ/Pages/VOC.aspx.

4.504.3.1 Carpet cushion. All carpet cushion installed in the building interior shall meet the requirements of the California Department of Public Health, "Standard Method for the Testing and Evaluation of Volatile Organic Chemical Emissions from Indoor Sources Using Environmental Chambers," Version 1.2, January 2017 (Emission testing method for California Specification 01350)

See California Department of Public Health's website for certification programs and testing labs.

https://www.cdph.ca.gov/Programs/CCDPHP/DEODC/EHLB/IAQ/Pages/VOC.aspx.

4.504.3.2 Carpet adhesive. All carpet adhesive shall meet the requirements of Table 4.504.1.

4.504.4 RESILIENT FLOORING SYSTEMS. Where resilient flooring is installed , at least 80% of floor area receiving resilient flooring shall meet the requirements of the California Department of Public Health, "Standard Method for the Testing and Evaluation of Volatile Organic Chemical Emissions from Indoor Sources Using Environmental Chambers," Version 1.2, January 2017 (Emission testing method for California Specification 01350)

See California Department of Public Health's website for certification programs and testing labs.

https://www.cdph.ca.gov/Programs/CCDPHP/DEODC/EHLB/IAQ/Pages/VOC.aspx.

4.504.5 COMPOSITE WOOD PRODUCTS. Hardwood plywood, particleboard and medium density fiberboard composite wood products used on the interior or exterior of the building shall meet the requirements for formaldehyde as specified in ARB's Air Toxic Control Measure for Composite Wood (17 CCR 93120 et seq.), by or before the dates specified in those sections, as shown in Table 4.504.5

4.504.5.1 Documentation. Verification of compliance with this section shall be provided as requested by the enforcing agency. Documentation shall include at least one of the following:

1. Product certifications and specifications.
2. Chain of custody certifications.
3. Product labeled and invoiced as meeting the Composite Wood Products regulation (see CCR, Title 17, Section 93120, et seq.).
4. Exterior grade plywood shall be marked as meeting the PS-1 or PS-2 standards of the Engineered Wood Association, the Australian AS/NZS 2269, European 636 3S standards, and Canadian CSA O121, CSA 0151, CSA 0153 and CSA 0325 standards.
5. Other methods acceptable to the enforcing agency.

4.505 INTERIOR MOISTURE CONTROL
4.505.1 General. Buildings shall meet or exceed the provisions of the *California Building Standards Code*.

4.505.2 CONCRETE SLAB FOUNDATIONS. Concrete slab foundations required to have a vapor retarder by California Building Code, Chapter 19, or concrete slab-on-ground floors required to have a vapor retarder by the California Residential Code, Chapter 5, shall also comply with this section.

4.505.2.1 Capillary break. A capillary break shall be installed in compliance with at least one of the following:

1. A 4-inch (101.6 mm) thick base of 1/2 inch (12.7mm) or larger clean aggregate shall be provided with a vapor barrier in direct contact with concrete and a concrete mix design, which will address bleeding, shrinkage, and curling, shall be used. For additional information, see American Concrete Institute, ACI 302.2R-06.
2. Other equivalent methods approved by the enforcing agency.
3. A slab design specified by a licensed design professional.

4.505.3 MOISTURE CONTENT OF BUILDING MATERIALS. Building materials with visible signs of water damage shall not be installed. Wall and floor framing shall not be enclosed when the framing members exceed 19 percent moisture content. Moisture content shall be verified in compliance with the following:

1. Moisture content shall be determined with either a probe-type or contact-type moisture meter.Equivalent moisture verification methods may be approved by the enforcing agency and shall satisfy requirements found in Section 101.8 of this code.
2. Moisture readings shall be taken at a point 2 feet (610 mm) to 4 feet (1219 mm) from the grade stamped end of each piece verified.
3. At least three random moisture readings shall be performed on wall and floor framing with documentation acceptable to the enforcing agency provided at the time of approval to enclose the wall and floor framing.

Insulation products which are visibly wet or have a high moisture content shall be replaced or allowed to dry prior to enclosure in wall or floor cavities. Wet-applied insulation products shall follow the manufacturers' drying recommendations prior to enclosure.

4.506 INDOOR AIR QUALITY AND EXHAUST
4.506.1 Bathroom exhaust fans. Each bathroom shall be mechanically ventilated and shall comply with the following:

1. Fans shall be ENERGY STAR compliant and be ducted to terminate outside the building.
2. Unless functioning as a component of a whole house ventilation system, fans must be controlled by a humidity control.
   a. Humidity controls shall be capable of adjustment between a relative humidity range less than or equal to 50% to a maximum of 80%. A humidity control may utilize manual or automatic means of adjustment.
   b. A humidity control may be a separate component to the exhaust fan and is not required to be integral (i.e., built-in)

Notes:

1. For the purposes of this section, a bathroom is a room which contains a bathtub, shower or tub/shower combination.
2. Lighting integral to bathroom exhaust fans shall comply with the *California Energy Code*.

4.507 ENVIRONMENTAL COMFORT
4.507.2 HEATING AND AIR-CONDITIONING SYSTEM DESIGN. Heating and air conditioning systems shall be sized, designed and have their equipment selected using the following methods:

1. The heat loss and heat gain is established according to ANSI/ACCA 2 Manual J - 2011 (Residential Load Calculation), ASHRAE handbooks or other equivalent design software or methods.
2. Duct systems are sized according to ANSI/ACCA 1 Manual D - 2014 (Residential Duct Systems), ASHRAE handbooks or other equivalent design software or methods.
3. Select heating and cooling equipment according to ANSI/ACCA 3 Manual S - 2014 (Residential Equipment Selection), or other equivalent design software or methods.

Exception: Use of alternate design temperatures necessary to ensure the system functions are acceptable.

CHAPTER 7
INSTALLER & SPECIAL INSPECTOR QUALIFICATIONS
702 QUALIFICATIONS
702.1 INSTALLER TRAINING. HVAC system installers shall be trained and certified in the proper installation of HVAC systems including ducts and equipment by a nationally or regionally recognized training or certification program. Uncertified persons may perform HVAC installations when under the direct supervision and responsibility of a person trained and certified to install HVAC systems or contractor licensed to install HVAC systems. Examples of acceptable HVAC training and certification programs include but are not limited to the following:

1. State certified apprenticeship programs.
2. Public utility training programs.
3. Training programs sponsored by trade, labor or statewide energy consulting or verification organizations.
4. Programs sponsored by manufacturing organizations.
5. Other programs acceptable to the enforcing agency.

702.2 SPECIAL INSPECTION [HCD]. When required by the enforcing agency, the owner or the responsible entity acting as the owner's agent shall employ one or more special inspectors to provide inspection or other duties necessary to substantiate compliance with this code. Special inspectors shall demonstrate competence to the satisfaction of the enforcing agency for the particular type of inspection or task to be performed. In addition to other certifications or qualifications acceptable to the enforcing agency, the following certifications or education may be considered by the enforcing agency when evaluating the qualifications of a special inspector:

1. Certification by a national or regional green building program or standard publisher.
2. Certification by a statewide energy consulting or verification organization, such as HERS raters, building performance contractors, and home energy auditors.
3. Successful completion of a third party apprentice training program in the appropriate trade.
4. Other programs acceptable to the enforcing agency.

Notes:

1. Special inspectors shall be independent entities with no financial interest in the materials or the project they are inspecting for compliance with this code.
2. HERS raters are special inspectors certified by the California Energy Commission (CEC) to rate homes in California according to the Home Energy Rating System (HERS).

[BSC] When required by the enforcing agency, the owner or the responsible entity acting as the owner's agent shall employ one or more special inspectors to provide inspection or other duties necessary to substantiate compliance with this code. Special inspectors shall demonstrate competence to the satisfaction of the enforcing agency for the particular type of inspection or task to be performed. In addition, the special inspector shall have a certification from a recognized state, national or international association, as determined by the local agency. The area of certification shall be closely related to the primary job function, as determined by the local agency.

Note: Special inspectors shall be independent entities with no financial interest in the materials or the project they are inspecting for compliance with this code.

703 VERIFICATIONS
703.1 DOCUMENTATION. Documentation used to show compliance with this code shall include but is not limited to, construction documents, plans, specifications, builder or installer certification, inspection reports, or other methods acceptable to the enforcing agency which demonstrate substantial conformance. When specific documentation or special inspection is necessary to verify compliance, that method of compliance will be specified in the appropriate section or identified applicable checklist.

NOT FOR CONSTRUCTION

DISCLAIMER: *THIS DOCUMENT IS PROVIDED AND INTENDED TO BE USED AS A MEANS TO INDICATE AREAS OF COMPLIANCE WITH THE CALIFORNIA GREEN BUILDING STANDARDS (CALGREEN) CODE. DUE TO THE VARIABLES BETWEEN BUILDING DEPARTMENT JURISDICTIONS, THIS CHECKLIST IS TO BE USED ON AN INDIVIDUAL PROJECT BASIS AND MAY BE MODIFIED BY THE END USER TO MEET THOSE INDIVIDUAL NEEDS. THE END USER ASSUMES ALL RESPONSIBILITY ASSOCIATED WITH THE USE OF THIS DOCUMENT, INCLUDING VERIFICATION WITH THE FULL CODE.*

12/14/2023 10:30:29 AM

workbench
189 WALNUT AVENUE
SANTA CRUZ, CA 95060
WORKBENCHBUILT.COM
P: 831.227.2217

BY USING THESE PRE-DESIGNED ADU PLANS, THE RECIPIENT IS ACKNOWLEDGING ACCEPTANCE OF THE FOLLOWING CONDITIONS.

1. THE USE OF THIS INFORMATION IS RESTRICTED TO THE ORIGINAL PROJECT FOR WHICH IT WAS PREPARED (THE PRE-DESIGNED ADU PLANS FOR THE COUNTY OF PLUMAS CALIFORNIA). USE OF THESE PLANS DOES NOT ELIMINATE OR REDUCE THE RECIPIENT'S RESPONSIBILITY TO VERIFY ANY AND ALL INFORMATION RELEVANT TO THE RECIPIENT'S WORK AND RESPONSIBILITY ON THIS PROJECT. WORKBENCH AND/OR THE COUNTY OF PLUMAS SHALL NOT BE RESPONSIBLE FOR TRANSLATION ERRORS.

2. THE RECIPIENT RECOGNIZES AND ACKNOWLEDGES THAT THE USE OF THIS INFORMATION WILL BE AT THEIR SOLE RISK AND WITHOUT ANY LIABILITY OR LEGAL EXPOSURE TO WORKBENCH OR THE COUNTY OF PLUMAS. NO WARRANTIES OF ANY NATURE, WHETHER EXPRESS OR IMPLIED, SHALL ATTACH TO THESE DOCUMENTS AND THE INFORMATION CONTAINED THEREON. ANY USE, REUSE, OR ALTERATION OF THESE DOCUMENTS BY THE RECIPIENT OR BY OTHERS WILL BE AT THE RECIPIENT'S RISK AND FULL LEGAL RESPONSIBILITY. FURTHERMORE, THE RECIPIENT WILL, TO THE FULLEST EXTENT PERMITTED BY LAW, INDEMNIFY AND HOLD WORKBENCH AND THE COUNTY OF PLUMAS HARMLESS FROM ANY AND ALL CLAIMS, SUITS, LIABILITY, DEMANDS, JUDGEMENTS, OR COSTS ARISING OUT OF OR RESULTING THERE FROM ON ACCOUNT OF ANY INJURY, DEATH, DAMAGE OR LOSS TO PERSONS OR PROPERTY.

3. THE DESIGNS REPRESENTED BY THESE PLANS ARE COPYRIGHTED AND SUBJECT TO COPYRIGHT PROTECTION. IF THE RECIPIENT DOES NOT AGREE WITH THE ABOVE CONDITIONS, THE RECIPIENT SHOULD NOT PROCEED BEYOND THIS DISCLAIMER.

PLUMAS COUNTY
PRE-DESIGNED ADU
PLAN C- TWO BEDROOM ADU
990 GSF

NOT FOR CONSTRUCTION

CALGREEN REQUIREMENTS - TYPE C

G2.1

SCALE : AS NOTED

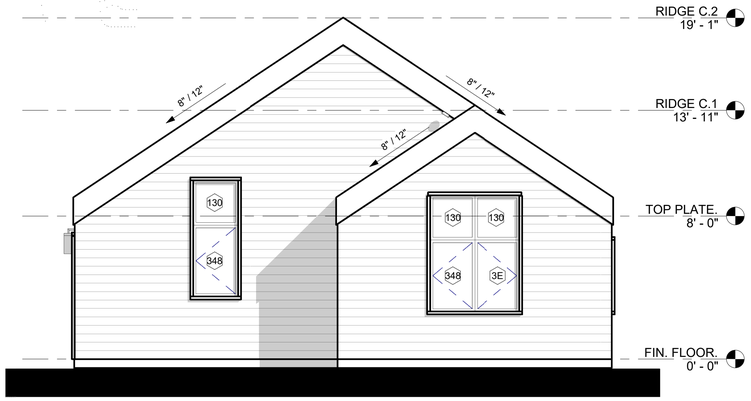

3 RIGHT ELEVATION - SUMMIT
1/4" = 1'-0"

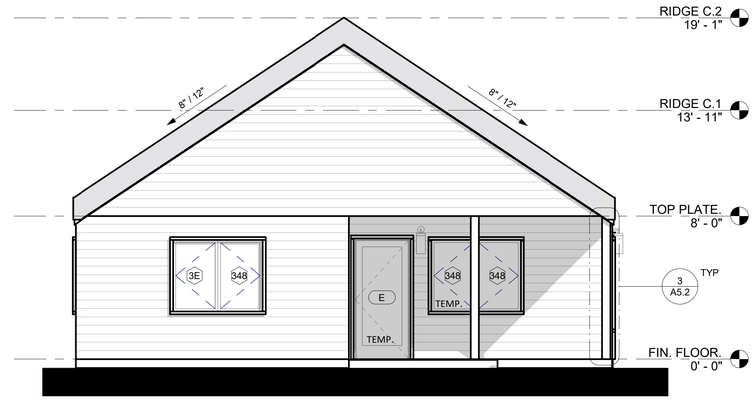

4 LEFT ELEVATION - SUMMIT
1/4" = 1'-0"

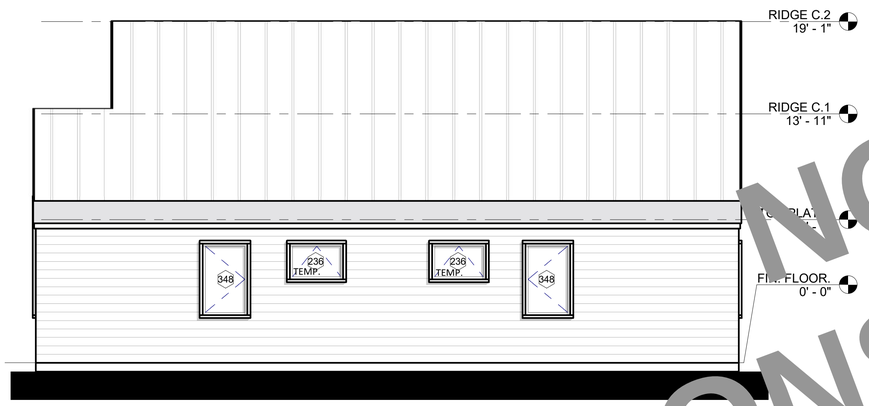

2 REAR ELEVATION - SUMMIT
1/4" = 1'-0"

5 FRONT ELEVATION - SUMMIT
1/4" = 1'-0"

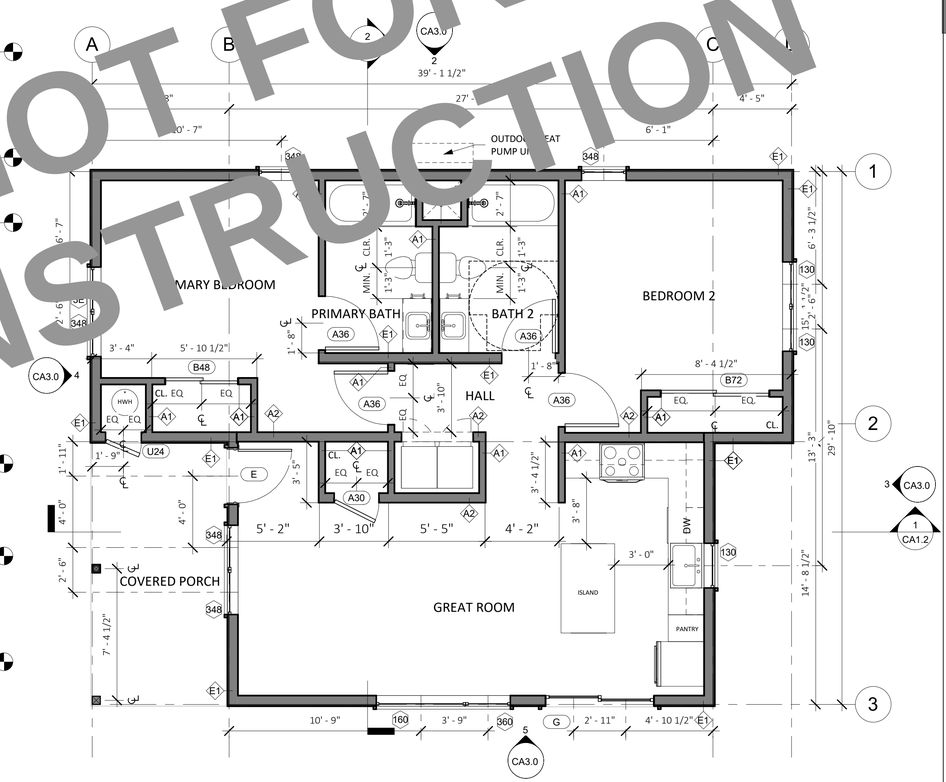

1 PLAN - TWO BEDROOM (990 GSF)
1/4" = 1'-0"

NOT FOR CONSTRUCTION

FLOORPLAN LEGEND

- (N) PARTITION
- CONCRETE SLAB (ARCHITECTURAL)
- (N) OUTLET AT 18", U.O.N
- (N) LIGHT SWITCH

GRAPHIC LEGEND

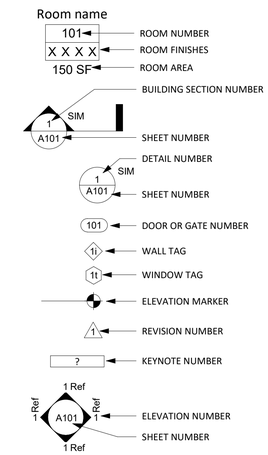

FLOOR PLAN NOTES

1. FLOORPLAN DIMENSIONS ARE TO FACE OF FRAMING OF SCHEDULED PARTITION OR GRIDLINE, UNLESS OTHERWISE NOTED.
2. ALL INTERIOR WALLS ARE TYPE A1 UNLESS OTHERWISE NOTED.
3. SEE SHEET A5.0 FOR EXTERIOR WALL TYPES AND DETAILS.
4. PROVIDE HANGER ROD AND SHELF AT WARDROBE CLOSETS.
5. WHERE THRESHOLDS ARE REQUIRED, PROVIDE ACCESSIBLE THRESHOLDS WITH MAXIMUM 1/2" ELEVATION CHANGE.
6. PROVIDE STRUCTURAL BACKING IN WALLS TO FACILITATE FUTURE INSTALLATION OF GRAB BARS AT TOILET AND SHOWER.
7. CONTRACTOR TO VERIFY LAYOUT, ROUGH FRAMING AND FINISH DIMS WITH OWNER'S FINAL INTERIOR DOORS AND FINISH SELECTIONS.
8. CONTRACTOR TO VERIFY EQUIPMENT SIZES PRIOR TO FRAMING.
9. FLOOR IN BATHROOMS TO BE NON-SLIP CERAMIC TILE.
10. SHOWER WALL SURFACES SHALL BE FINISHED WITH A NONABSORBENT SURFACE, SUCH SURFACE SHALL EXTEND TO A HEIGHT OF NOT LESS THAN 6 FEET (72 INCHES) ABOVE THE FLOOR. (CRC R307.2)
11. MATERIALS USED AS BACKERS FOR WALL TILE IN TUB AND SHOWER AREAS AND WALL PANELS IN SHOWER AREAS SHALL BE OF MATERIALS LISTED IN THE CRC TABLE R702.4.2, AND INSTALLED IN ACCORDANCE WITH THE MANUFACTURER'S RECOMMENDATIONS.
12. PROVIDE GRAB BAR REINFORCEMENT IN BATHROOMS PER CRC SECTION R327.1.1.
13. SHOWER AND TUB SHOWER COMBINATIONS SHALL BE PROVIDED WITH INDIVIDUAL CONTROL VALVES OF THE PRESSURE BALANCE,THERMOSTATIC, OR COMBINATION PRESSURE BALANCE AND THERMOSTATIC TYPES THAT PROVIDE SCALD AND THERMAL SHOCK PROTECTION.
14. CONTROL VALVES AND SHOWER HEADS SHALL BE ARRANGED SO THAT THE SHOWER HEAD DOES NOT DISCHARGE DIRECTLY AT ENTRANCE TO THE COMPARTMENT SO THAT THE BATHER CAN ADJUST THE VALVES PRIOR TO STEPPING INTO THE SHOWER SPRAY.
15. CLOTHES DRYER MOISTURE EXHAUST DUCTS SHALL TERMINATE OUTSIDE THE BUILDING AND HAVE A BACK-DRAFT DAMPER. EXHAUST DUCT IS LIMITED TO 14' WITH TWO ELBOWS. THIS SHALL BE REDUCED BY 2' FOR EVERY ELBOW IN EXCESS OF TWO.(CMC 504.3)

ELEVATION NOTES

1. ELEVATION DIMENSIONS ARE TO GRIDLINE OR CENTERLINE OF WINDOWS, UNLESS OTHERWISE NOTED.
2. SEE SHEET A5.0 FOR EXTERIOR WALL TYPES AND DETAILS.
3. MATERIALS INDICATED ARE SHOWN GENERICALLY. ACTUAL MATERIALS ARE AS SELECTED BY THE OWNER.

workbench

189 WALNUT AVENUE
SANTA CRUZ, CA 95060
WORKBENCHBUILT.COM
P: 831.227.2217

BY USING THESE PRE-DESIGNED ADU PLANS, THE RECIPIENT IS ACKNOWLEDGING ACCEPTANCE OF THE FOLLOWING CONDITIONS.

1. THE USE OF THIS INFORMATION IS RESTRICTED TO THE ORIGINAL PROJECT FOR WHICH IT WAS PREPARED (THE PRE-DESIGNED ADU PLANS FOR THE COUNTY OF PLUMAS CALIFORNIA). USE OF THESE PLANS DOES NOT ELIMINATE OR REDUCE THE RECIPIENT'S RESPONSIBILITY TO VERIFY ANY AND ALL INFORMATION RELEVANT TO THE RECIPIENT'S WORK AND RESPONSIBILITY ON THIS PROJECT. WORKBENCH AND/OR THE COUNTY OF PLUMAS SHALL NOT BE RESPONSIBLE FOR TRANSLATION ERRORS.

2. THE RECIPIENT RECOGNIZES AND ACKNOWLEDGES THAT THE USE OF THIS INFORMATION WILL BE AT THEIR SOLE RISK AND WITHOUT ANY LIABILITY OR LEGAL EXPOSURE TO WORKBENCH OR THE COUNTY OF PLUMAS. NO WARRANTIES OF ANY NATURE, WHETHER EXPRESS OR IMPLIED, SHALL ATTACH TO THESE DOCUMENTS AND THE INFORMATION CONTAINED THEREON. ANY USE, REUSE, OR ALTERATION OF THESE DOCUMENTS BY THE RECIPIENT OR BY OTHERS WILL BE AT THE RECIPIENT'S RISK AND FULL LEGAL RESPONSIBILITY. FURTHERMORE, THE RECIPIENT WILL, TO THE FULLEST EXTENT PERMITTED BY LAW, INDEMNIFY AND HOLD WORKBENCH AND THE COUNTY OF PLUMAS HARMLESS FROM ANY AND ALL CLAIMS, SUITS, LIABILITY, DEMANDS, JUDGEMENTS, OR COSTS ARISING OUT OF OR RESULTING THERE FROM ON ACCOUNT OF ANY INJURY, DEATH, DAMAGE OR LOSS TO PERSONS OR PROPERTY.

3 THE DESIGNS REPRESENTED BY THESE PLANS ARE COPYRIGHTED AND SUBJECT TO COPYRIGHT PROTECTION. IF THE RECIPIENT DOES NOT AGREE WITH THE ABOVE CONDITIONS, THE RECIPIENT SHOULD NOT PROCEED BEYOND THIS DISCLAIMER.

PLUMAS COUNTY PRE-DESIGNED ADU

PLAN C- TWO BEDROOM ADU
990 GSF

NOT FOR CONSTRUCTION

C - SUMMIT - FLOORPLAN & ELEVATIONS

A1.0

SCALE : AS NOTED

12/14/2023 10:29:51 AM

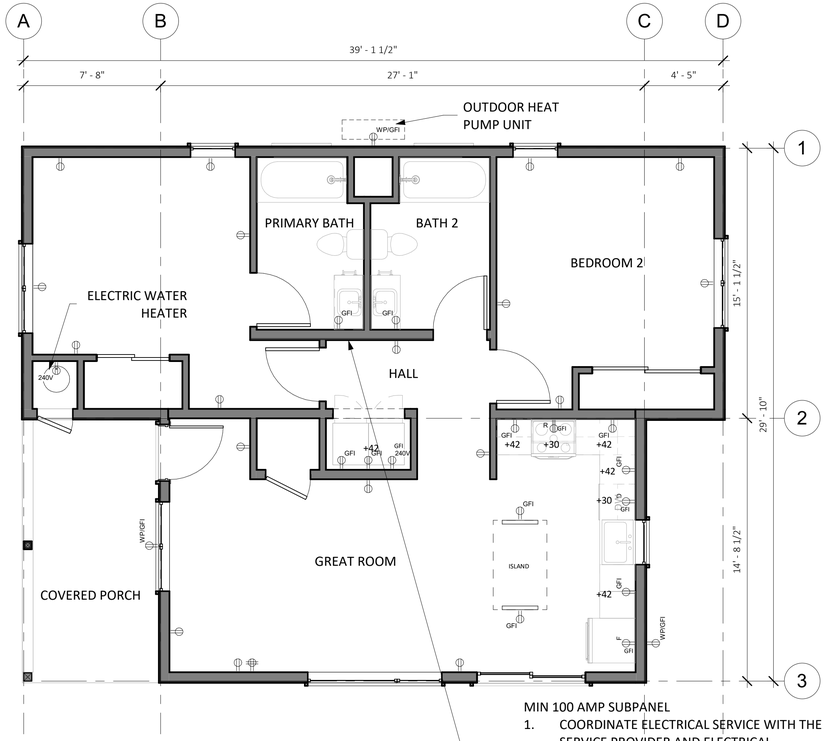

MIN 100 AMP SUBPANEL

1. COORDINATE ELECTRICAL SERVICE WITH THE SERVICE PROVIDER AND ELECTRICAL SUBCONTRACTOR.
2. PROVIDE DISCONNECT SWITCH AT SEPARATE STRUCTURE IF MORE THAN TWO BRANCH CIRCUITS ARE PROPOSED. MINIMUM [illegible] AND BUS BAR REQUIRED.

1 ELECTRICAL PLAN - TWO BEDROOM
1/4" = 1'-0"

ROOF PLAN NOTES

1. ROOF DIMENSIONS TAKEN FROM ROOF EDGE/FASCIA TO EXTERIOR FACE OF PLYWOOD. REFER TO REFERENCED DETAILS FOR OVERHANG DIMENSIONS.
2. ALL ROOF AREAS SHALL BE CLASS A RATED COMPOSITION TILES OR EQUAL.
3. WOOD SHINGLES SHALL NOT BE USED.
4. PROVIDE 26 GAUGE CORROSION RESISTANT METAL FLASHING AT ROOF/WALL INTERSECTIONS AND AROUND ROOF OPENINGS.
5. GANG VENTS WHENEVER POSSIBLE.
6. ROOFER AND SOLAR INSTALLER TO COORDINATE INSTALLATION OF PVS AND PV ROOF CLIPS.
7. INSTALL SNOW GUARDS AT METAL ROOFS PER MFG'S. INSTRUCTIONS
8. INSTALL ICE DAM PROTECTION AT ALL ROOF EAVES, VALLEYS AND PITCH CHANGES PER PLUMAS COUNTY AMENDMENTS TO CBC 1507.2.8.2. SEE EAVE DETAILS.

ELECTRICAL LEGEND

- CEILING-MOUNTED EXHAUST UNIT
- DUPLEX RECEPTACLE
- QUAD RECEPTACLE
- GFCI RECEPTACLE
- 220 VOLT RECEPTACLE OUTLET
- DEDICATED OUTLET
- RECESSED LED DOWN LIGHT
- WALL MOUNT LIGHT
- LED STRIP LIGHT
- SWITCH
- DIMMER SWITCH
- MOTION-SENSOR SWITCH
- VACANCY SWITCH
- FAN SWITCH/HUMIDITY SENSOR
- SWITCH LEG
- WHOLE HOUSE VENTILATION FAN PER ASHRAE 62.2, DUCT TO EXTERIOR PER MANUFACTURER'S SPECIFICATIONS
- 3 WAY SWITCH

NOTE: SEE ELECTRICAL NOTES ON SHEET G1.0

REFLECTED CEILING PLAN NOTES

1. LIGHT FIXTURE DIMENSIONS ARE TO CENTERLINE OF FIXTURE AND FACE OF FINISH AT WALL.
2. PROVIDED TOTALS OF LIGHT FIXTURES ARE FOR REFERENCE ONLY. ACTUAL TOTALS TO BE VERIFIED BY CONTRACTOR.
3. SMOKE DETECTORS SHALL BE LISTED FOR USE WITHIN 10 FEET OF A COOKING APPLIANCE.

REFLECTED CEILING PLAN LEGEND

- GYP. BD. CLG., PTD.
- 8' - 0" FRAMED CEILING HEIGHT A.F.F.
- (S) **PHOTOELECTRIC** CEILING MOUNTED SMOKE DETECTOR. HARDWIRED WITH BATTERY BACKUP. OWNER TO APPROVE SELECTION PRIOR TO PURCHASE. ALL SMOKE DETECTORS SHALL COMPLY WITH 2022 C.R.C. SECTION R314 AND SHALL BE 120V STATE FIRE MARSHAL APPROVED DEVICES INSTALLED IN ACCORDANCE WITH THEIR LISTING.
- (C) CARBON MONOXIDE DETECTOR COMBINATION SMOKE DETECTOR AND CARBON MONOXIDE DETECTOR TO BE CEILING MOUNTED. HARDWIRED WITH BATTERY BACKUP. OWNER TO APPROVE SELECTION PRIOR TO PURCHASE. CARBON MONOXIDE ALARMS COMBINED WITH SMOKE ALARMS SHALL COMPLY WITH 2022 C.R.C. SECTION 315, ALL APPLICABLE STANDARDS, AND REQUIREMENTS FOR LISTINGS AND APPROVAL BY THE OFFICE OF THE STATE FIRE MARSHAL.

LIGHTING NOTES

1. ALL PERMANENTLY INSTALLED LUMINAIRES SHALL BE CLASSIFIED HIGH LUMINOUS EFFICACY, AS SPECIFIED IN CEC 150.0(K). RECESSED DOWLIGHT LUMINAIRES MUST CONTAIN LIGHT SOURCES THAT ARE JA8-CERTIFIED, MUST NOT CONTAIN SCREW-BASED LAMPS AND MUST NOT CONTAIN LIGHT SOURCES THAT ARE FOR USE IN ENCLOSED LUMINAIRES OR NOT FOR USE IN RECESSED LUMINAIRES.
2. FOR ENCLOSED LUMINAIRES AND RECESSED LUMINAIRES OTHER THAN CEILING-RECESSED DOWNLIGHTS, THE INSTALLED LIGHT SOURCES MUST BE JA8-COMPLIANT AND MEET THE ELEVATED TEMPERATURES TESTING REQUIREMENT.
3. THE FOLLOWING SPACES ARE REQUIRED TO HAVE AT LEAST ONE INSTALLED LUMINAIRE IN THE SPACE CONTROLLED BY AN OCCUPANCY OR VACANCY SENSORY PROVIDING AUTOMATIC-OFF FUNCTIONALITY:
   - A. BATHROOMS
   - B. GARAGES
   - C. LAUNDRY ROOMS
   - D. UTILITY ROOMS
   - E. WALK-IN CLOSETS
4. THE NUMBER OF BLANK ELECTRICAL BOXES MORE THAN 5 FEET ABOVE THE FINISHED FLOOR SHALL NOT BE GREATER THAN THE NUMBER OF BEDROOMS. THESE BOXES SHALL BE CONTROLLED BY A DIMMER, VACANCY SENSOR, OR FAN SPEED CONTROL. CEC 150.0(K)8.
5. EXHAUST FANS (EXCLUDING KITCHEN EXHAUST HOOD) SHALL BE SWITCHED SEPARATE FROM LIGHTING (OR UTILIZE A DEVICE WHERE LIGHTING CAN BE TURNED OFF WHILE FAN IS RUNNING).
6. PROVIDE SEPARATE SWITCHING FOR ANY UNDER CABINET LIGHTING FROM OTHER LIGHTING SYSTEMS CEC150.0(K)2L.
7. ALL RECESSED DOWNLIGHT LUMINARIES IN CEILINGS SHALL MEET ALL OF THE FOLLOWING REQUIREMENTS:
   - A. BE LISTED, AS DEFINED ON SECTION 100.1, FOR ZERO CLEARANCE INSULATION CONTACT(IC) BY UNDERWRITERS LABORATORY OR OTHER NATIONALLY RECOGNIZED TESTING/RATING LABORATORY; AND
   - B. HAVE A LABEL THAT CERTIFIES THE LUMINAIRE IS AIRTIGHT WITH AIR LEAKAGE LESS THAN 2.0 CFM AT 75 PASCALS WHEN TESTED IN ACCORDANCE WITH ASTM E283. ANY EXHAUST FAN HOUSING SHALL NOT BE REQUIRED TO BE CERTIFIED AIRTIGHT; AND
   - C. BE SEALED WITH A GASKET OR CAULK BETWEEN THE LUMINAIRE HOUSING AND CEILING, AND SHALL HAVE ALL AIR LEAK PATHS BETWEEN CONDITIONED AND UNCONDITIONED SPACES SEALED WITH A GASKET OUR CAULK; AND
   - D. FOR LUMINAIRES WITH HARDWIRED BALLASTS OR DRIVERS, ALLOW BALLAST OR DRIVER MAINTENANCE AND REPLACEMENT TO BE READILY ACCESSIBLE TO BUILDING OCCUPANTS FROM BELOW CEILING WITHOUT REQUIRING THE CUTTING OF HOLES IN THE CEILING; AND
   - E. SHALL NOT CONTAIN SCREW-BASED SOCKETS; AND
   - F. SHALL CONTAIN LIGHT SOURCES THAT COMPLY WITH REFERENCES JOINT APPENDIX JA8, INCLUDING THE ELEVATED TEMPERATURE REQUIREMENTS, AND THAT ARE MARKED "JAS-2022-E" AS SPECIFIED IN REFERENCE JOINT APPENDIX JA8.
8. ALL OUTDOOR LIGHTING SHALL BE HIGH EFFICACY WITH MANUAL ON/OFF SWITCH AND ONE OF THE FOLLOWING IN ACCORDANCE WITH CEC 150.0(K)3
   - A. PHOTOCONTROL AND MOTION SENSOR
   - B. PHOTOCONTROL AND AUTO TIME SWITCH CONTROL
   - C. ASTRONOMICAL TIME SWITCH CONTROL
   - D. ENERGY MANAGEMENT CONTROL SYSTEMS
9. ALL LIGHT FIXTURES LOCATED IN TUB OR SHOWER ENCLOSURE SHALL BE LABELLED "SUITABLE FOR WET LOCATIONS" CEC 410.10A
10. ALL EXTERIOR LIGHTING TO COMPLY WITH THE DARK SKY REGULATION; FIXTURES MUST HAVE A FULLY SHIELDED TOP DIRECTING THE LIGHT DOWNWARD AND A COLOR TEMPERATURE OF 3000K OR LESS.
11. STORAGE OR EQUIPMENT SPACES. FOR ATTICS, UNDERFLOOR SPACES, UTILITY ROOMS, AND BASEMENTS, AT LEAST ONE LIGHTING OUTLET CONTAINING A SWITCH OR CONTROLLED BY A WALL SWITCH SHALL BE INSTALLED WHERE THESE SPACES ARE USED FOR STORAGE OR CONTAIN EQUIPMENT REQUIRING SERVICING OR REPLACEMENT. AT LEAST ONE POINT OF CONTROL SHALL BE AT THE USUAL POINT OF ENTRY TO THESE SPACES. THE LIGHTING OUTLET SHALL BE PROVIDED AT OR NEAR THE EQUIPMENT REQUIRING SERVICING OR REPLACEMENT. CEC 210.70(A)(3)

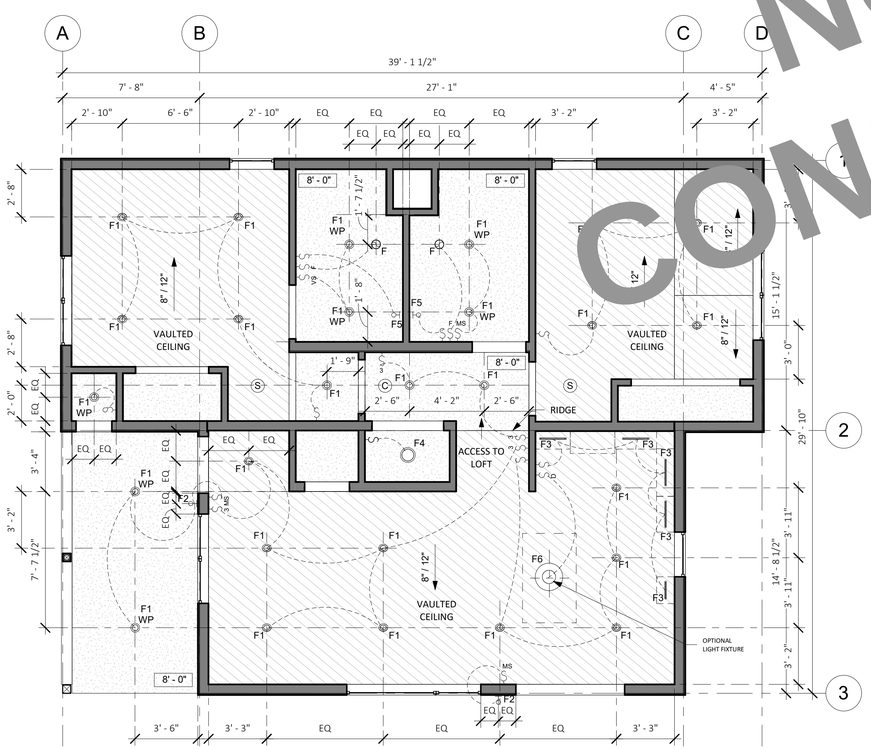

3 RCP - TWO BEDROOM
1/4" = 1'-0"

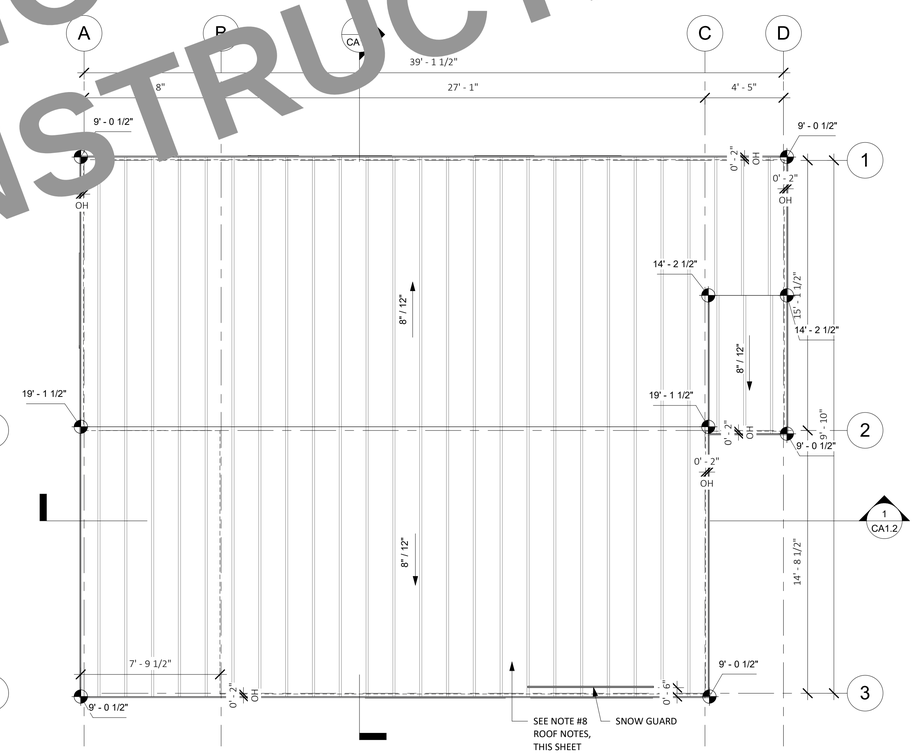

2 ROOF PLAN - SUMMIT
1/4" = 1'-0"

NOT FOR CONSTRUCTION

workbench
189 WALNUT AVENUE
SANTA CRUZ, CA 95060
WORKBENCHBUILT.COM
P: 831.227.2217

BY USING THESE PRE-DESIGNED ADU PLANS, THE RECIPIENT IS ACKNOWLEDGING ACCEPTANCE OF THE FOLLOWING CONDITIONS.

1. THE USE OF THIS INFORMATION IS RESTRICTED TO THE ORIGINAL PROJECT FOR WHICH IT WAS PREPARED (THE PRE-DESIGNED ADU PLANS FOR THE COUNTY OF PLUMAS CALIFORNIA). USE OF THESE PLANS DOES NOT ELIMINATE OR REDUCE THE RECIPIENT'S RESPONSIBILITY TO VERIFY ANY AND ALL INFORMATION RELEVANT TO THE RECIPIENT'S WORK AND RESPONSIBILITY ON THIS PROJECT. WORKBENCH AND/OR THE COUNTY OF PLUMAS SHALL NOT BE RESPONSIBLE FOR TRANSLATION ERRORS.

2. THE RECIPIENT RECOGNIZES AND ACKNOWLEDGES THAT THE USE OF THIS INFORMATION WILL BE AT THEIR SOLE RISK AND WITHOUT ANY LIABILITY OR LEGAL EXPOSURE TO WORKBENCH OR THE COUNTY OF PLUMAS. NO WARRANTIES OF ANY NATURE, WHETHER EXPRESS OR IMPLIED, SHALL ATTACH TO THESE DOCUMENTS AND THE INFORMATION CONTAINED THEREON. ANY USE, REUSE, OR ALTERATION OF THESE DOCUMENTS BY THE RECIPIENT OR BY OTHERS WILL BE AT THE RECIPIENT'S RISK AND FULL LEGAL RESPONSIBILITY. FURTHERMORE, THE RECIPIENT WILL, TO THE FULLEST EXTENT PERMITTED BY LAW, INDEMNIFY AND HOLD WORKBENCH AND THE COUNTY OF PLUMAS HARMLESS FROM ANY AND ALL CLAIMS, SUITS, LIABILITY, DEMANDS, JUDGEMENTS, OR COSTS ARISING OUT OF OR RESULTING THERE FROM ON ACCOUNT OF ANY INJURY, DEATH, DAMAGE OR LOSS TO PERSONS OR PROPERTY.

3 THE DESIGNS REPRESENTED BY THESE PLANS ARE COPYRIGHTED AND SUBJECT TO COPYRIGHT PROTECTION. IF THE RECIPIENT DOES NOT AGREE WITH THE ABOVE CONDITIONS, THE RECIPIENT SHOULD NOT PROCEED BEYOND THIS DISCLAIMER.

PLUMAS COUNTY PRE-DESIGNED ADU

PLAN C- TWO BEDROOM ADU
990 GSF

NOT FOR CONSTRUCTION

C - SUMMIT - ROOF PLAN, ELECTRICAL & RCP

A1.1

SCALE : AS NOTED

12/14/2023 10:29:53 AM

NOT FOR CONSTRUCTION

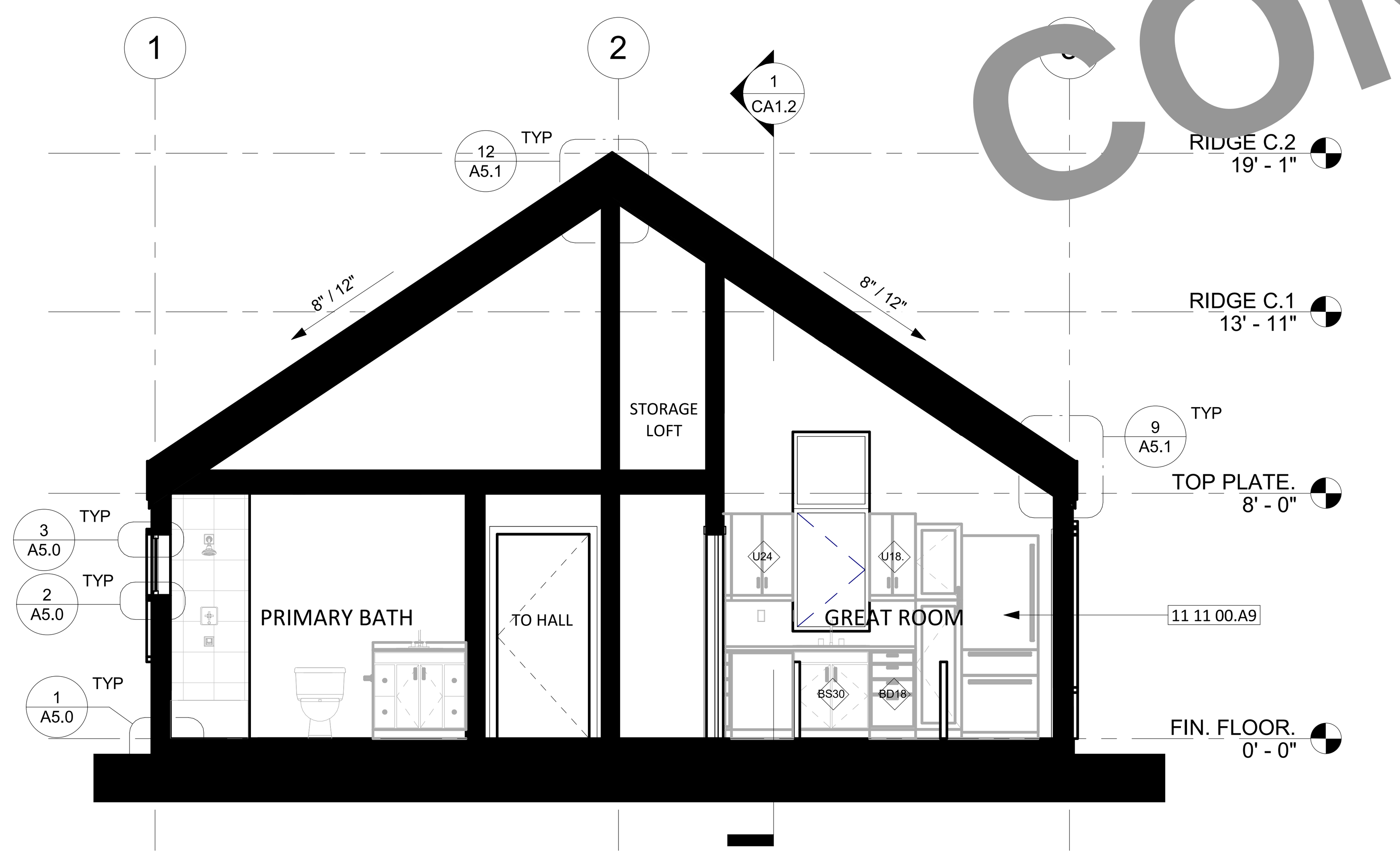

2 CROSS SECTION - SUMMIT
1/4" = 1'-0"

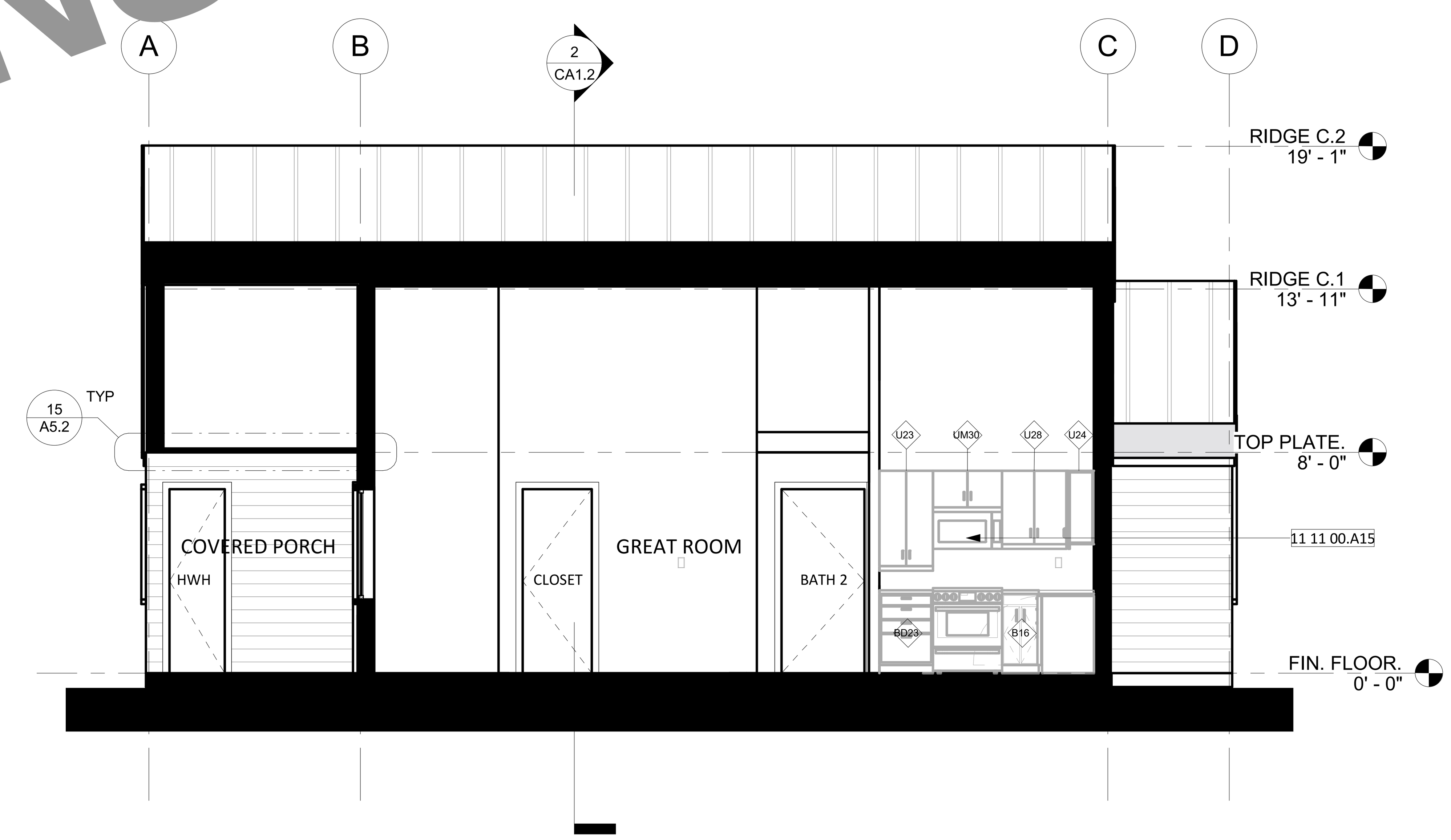

1 LONGITUDINAL SECTION 1 - SUMMIT
1/4" = 1'-0"

12/14/2023 10:29:55 AM

KITCHEN KEYNOTES

TAG	DESCRIPTION
CABINET WIDTH	
B16	16" BASE CABINET
BD18	18" BASE CABINET - DRAWERS
BD20	20" BASE CABINET - DRAWERS
BD23	23" BASE CABINET - DRAWERS
U18.	24" UPPER CABINET
U23	23" UPPER CABINET
U24	24" UPPER CABINET
U28	28" UPPER CABINET
U32	27" UPPER CABINET
UM30	30" UPPER CABINET - ABOVE MICROWAVE
APPLIANCES	
11 11 00.A1	24" CLOTHES DRYER (HOMEOWNER PROVIDED)
11 11 00.A2	24" CLOTHES WASHER (HOMEOWNER PROVIDED)
11 11 00.A4	24" DISHWASHER
11 11 00.A8	24" STACKED CLOTHES DRYER
11 11 00.A14	30" ELECTRIC RANGE
11 11 00.A15	30" MICROWAVE / HOOD VENT COMBO UNIT
11 11 00.A9	30" REFRIGERATOR
PLUMBING	
22 40 00.A4	30" KITCHEN SINK/FAUCET

workbench

189 WALNUT AVENUE
SANTA CRUZ, CA 95060
WORKBENCHBUILT.COM
P: 831.227.2217

BY USING THESE PRE-DESIGNED ADU PLANS, THE RECIPIENT IS ACKNOWLEDGING ACCEPTANCE OF THE FOLLOWING CONDITIONS.

1. THE USE OF THIS INFORMATION IS RESTRICTED TO THE ORIGINAL PROJECT FOR WHICH IT WAS PREPARED (THE PRE-DESIGNED ADU PLANS FOR THE COUNTY OF PLUMAS CALIFORNIA). USE OF THESE PLANS DOES NOT ELIMINATE OR REDUCE THE RECIPIENT'S RESPONSIBILITY TO VERIFY ANY AND ALL INFORMATION RELEVANT TO THE RECIPIENT'S WORK AND RESPONSIBILITY ON THIS PROJECT. WORKBENCH AND/OR THE COUNTY OF PLUMAS SHALL NOT BE RESPONSIBLE FOR TRANSLATION ERRORS.

2. THE RECIPIENT RECOGNIZES AND ACKNOWLEDGES THAT THE USE OF THIS INFORMATION WILL BE AT THEIR SOLE RISK AND WITHOUT ANY LIABILITY OR LEGAL EXPOSURE TO WORKBENCH OR THE COUNTY OF PLUMAS. NO WARRANTIES OF ANY NATURE, WHETHER EXPRESS OR IMPLIED, SHALL ATTACH TO THESE DOCUMENTS AND THE INFORMATION CONTAINED THEREON. ANY USE, REUSE, OR ALTERATION OF THESE DOCUMENTS BY THE RECIPIENT OR BY OTHERS WILL BE AT THE RECIPIENT'S RISK AND FULL LEGAL RESPONSIBILITY. FURTHERMORE, THE RECIPIENT WILL, TO THE FULLEST EXTENT PERMITTED BY LAW, INDEMNIFY AND HOLD WORKBENCH AND THE COUNTY OF PLUMAS HARMLESS FROM ANY AND ALL CLAIMS, SUITS, LIABILITY, DEMANDS, JUDGEMENTS, OR COSTS ARISING OUT OF OR RESULTING THERE FROM ON ACCOUNT OF ANY INJURY, DEATH, DAMAGE OR LOSS TO PERSONS OR PROPERTY.

3 THE DESIGNS REPRESENTED BY THESE PLANS ARE COPYRIGHTED AND SUBJECT TO COPYRIGHT PROTECTION. IF THE RECIPIENT DOES NOT AGREE WITH THE ABOVE CONDITIONS, THE RECIPIENT SHOULD NOT PROCEED BEYOND THIS DISCLAIMER.

PLUMAS COUNTY PRE-DESIGNED ADU

PLAN C- TWO BEDROOM ADU
990 GSF

NOT FOR CONSTRUCTION

C - SUMMIT - SECTIONS

SCALE : AS NOTED

3 RIGHT ELEVATION - LAKESIDE
1/4" = 1'-0"

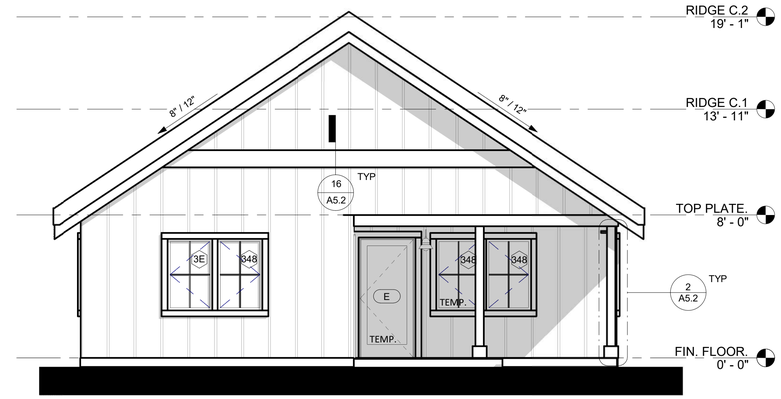

4 LEFT ELEVATION - LAKESIDE
1/4" = 1'-0"

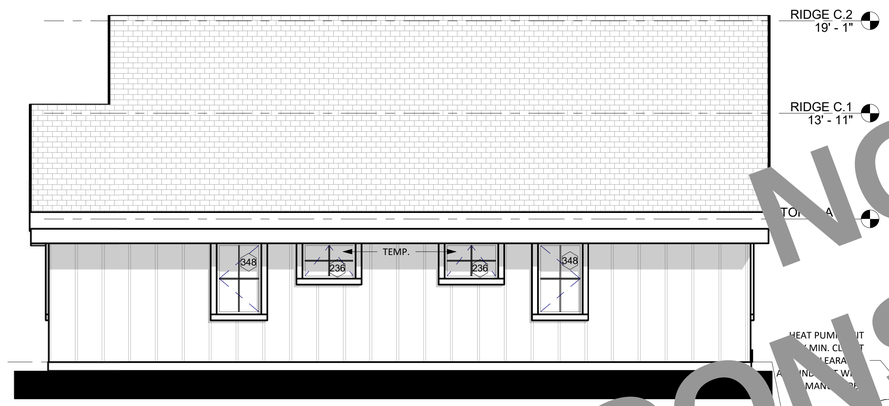

2 REAR ELEVATION - LAKESIDE
1/4" = 1'-0"

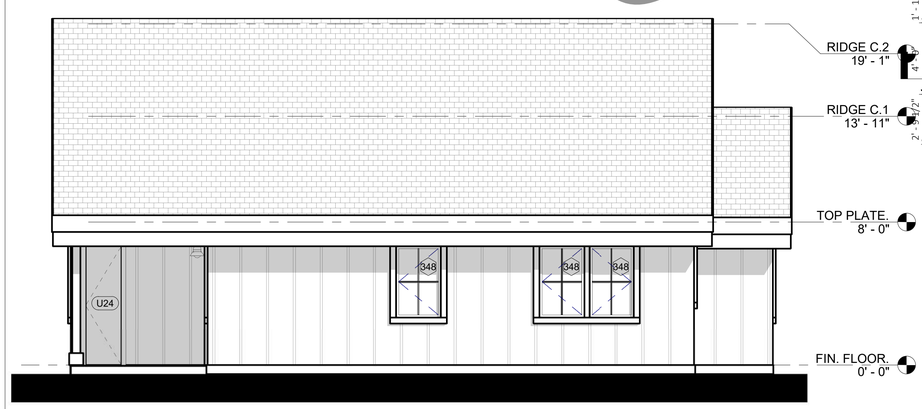

5 FRONT ELEVATION - LAKESIDE
1/4" = 1'-0"

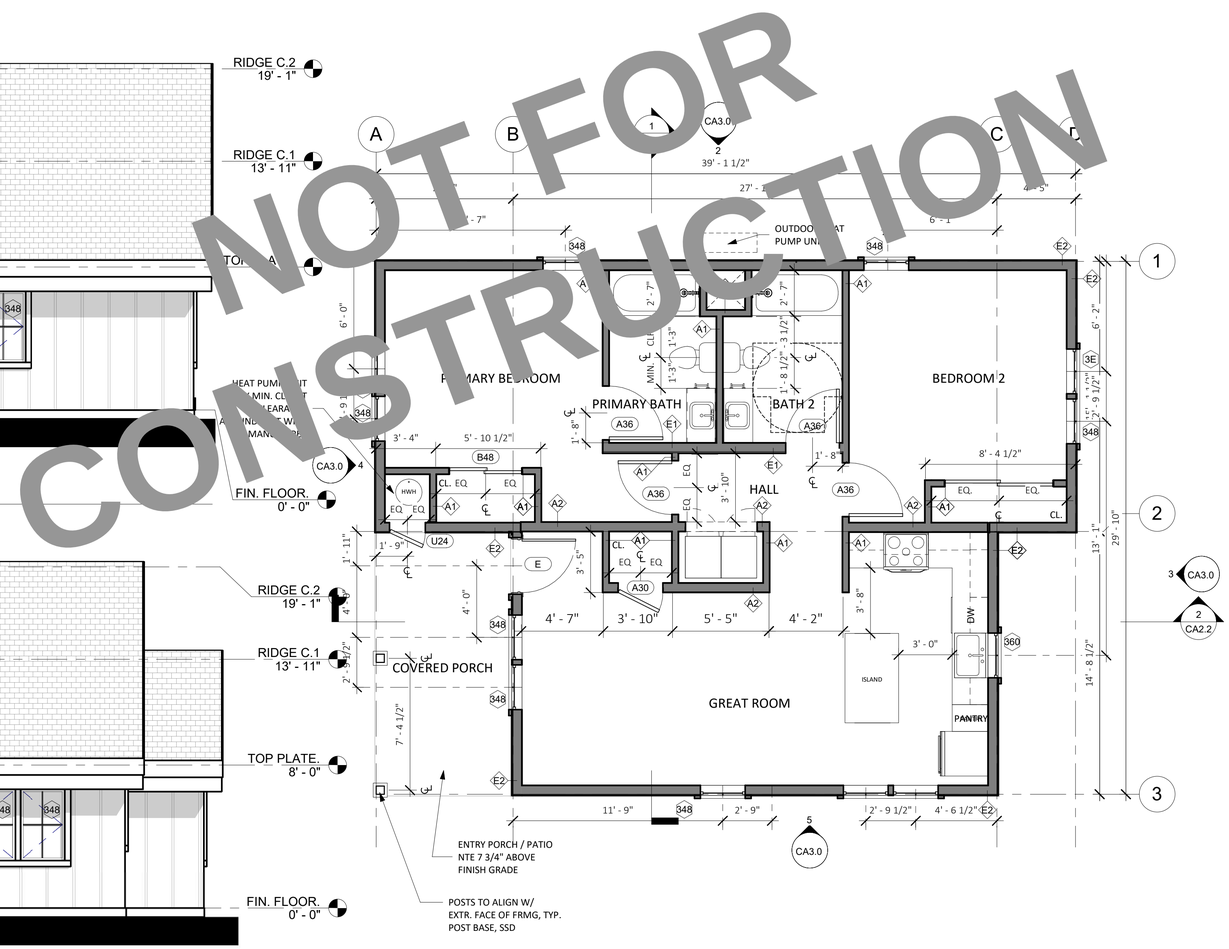

1 PLAN - TWO BEDROOM (990 GSF)
1/4" = 1'-0"

NOT FOR CONSTRUCTION

FLOORPLAN LEGEND

- (N) PARTITION
- CONCRETE SLAB (ARCHITECTURAL)
- (N) OUTLET AT 18", U.O.N
- (N) LIGHT SWITCH

GRAPHIC LEGEND

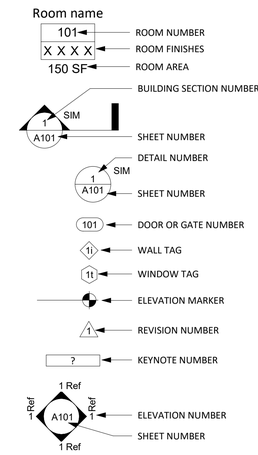

FLOOR PLAN NOTES

1. FLOORPLAN DIMENSIONS ARE TO FACE OF FRAMING OF SCHEDULED PARTITION OR GRIDLINE, UNLESS OTHERWISE NOTED.
2. ALL INTERIOR WALLS ARE TYPE A1 UNLESS OTHERWISE NOTED.
3. SEE SHEET A5.0 FOR EXTERIOR WALL TYPES AND DETAILS.
4. PROVIDE HANGER ROD AND SHELF AT WARDROBE CLOSETS.
5. WHERE THRESHOLDS ARE REQUIRED, PROVIDE ACCESSIBLE THRESHOLDS WITH MAXIMUM 1/2" ELEVATION CHANGE.
6. PROVIDE STRUCTURAL BACKING IN WALLS TO FACILITATE FUTURE INSTALLATION OF GRAB BARS AT TOILET AND SHOWER.
7. CONTRACTOR TO VERIFY LAYOUT, ROUGH FRAMING AND FINISH DIMS WITH OWNER'S FINAL INTERIOR DOORS AND FINISH SELECTIONS.
8. CONTRACTOR TO VERIFY EQUIPMENT SIZES PRIOR TO FRAMING.
9. FLOOR IN BATHROOMS TO BE NON-SLIP CERAMIC TILE.
10. SHOWER WALL SURFACES SHALL BE FINISHED WITH A NONABSORBENT SURFACE, SUCH SURFACE SHALL EXTEND TO A HEIGHT OF NOT LESS THAN 6 FEET (72 INCHES) ABOVE THE FLOOR. (CRC R307.2)
11. MATERIALS USED AS BACKERS FOR WALL TILE IN TUB AND SHOWER AREAS AND WALL PANELS IN SHOWER AREAS SHALL BE OF MATERIALS LISTED IN THE CRC TABLE R702.4.2, AND INSTALLED IN ACCORDANCE WITH THE MANUFACTURER'S RECOMMENDATIONS.
12. PROVIDE GRAB BAR REINFORCEMENT IN BATHROOMS PER CRC SECTION R327.1.1.
13. SHOWER AND TUB SHOWER COMBINATIONS SHALL BE PROVIDED WITH INDIVIDUAL CONTROL VALVES OF THE PRESSURE BALANCE,THERMOSTATIC, OR COMBINATION PRESSURE BALANCE AND THERMOSTATIC TYPES THAT PROVIDE SCALD AND THERMAL SHOCK PROTECTION.
14. CONTROL VALVES AND SHOWER HEADS SHALL BE ARRANGED SO THAT THE SHOWER HEAD DOES NOT DISCHARGE DIRECTLY AT ENTRANCE TO THE COMPARTMENT SO THAT THE BATHER CAN ADJUST THE VALVES PRIOR TO STEPPING INTO THE SHOWER SPRAY.
15. CLOTHES DRYER MOISTURE EXHAUST DUCTS SHALL TERMINATE OUTSIDE THE BUILDING AND HAVE A BACK-DRAFT DAMPER. EXHAUST DUCT IS LIMITED TO 14' WITH TWO ELBOWS. THIS SHALL BE REDUCED BY 2' FOR EVERY ELBOW IN EXCESS OF TWO.(CMC 504.3)

ELEVATION NOTES

1. ELEVATION DIMENSIONS ARE TO GRIDLINE OR CENTERLINE OF WINDOWS, UNLESS OTHERWISE NOTED.
2. SEE SHEET A5.0 FOR EXTERIOR WALL TYPES AND DETAILS.
3. MATERIALS INDICATED ARE SHOWN GENERICALLY. ACTUAL MATERIALS ARE AS SELECTED BY THE OWNER.

workbench

189 WALNUT AVENUE
SANTA CRUZ, CA 95060
WORKBENCHBUILT.COM
P: 831.227.2217

BY USING THESE PRE-DESIGNED ADU PLANS, THE RECIPIENT IS ACKNOWLEDGING ACCEPTANCE OF THE FOLLOWING CONDITIONS.

1. THE USE OF THIS INFORMATION IS RESTRICTED TO THE ORIGINAL PROJECT FOR WHICH IT WAS PREPARED (THE PRE-DESIGNED ADU PLANS FOR THE COUNTY OF PLUMAS CALIFORNIA). USE OF THESE PLANS DOES NOT ELIMINATE OR REDUCE THE RECIPIENT'S RESPONSIBILITY TO VERIFY ANY AND ALL INFORMATION RELEVANT TO THE RECIPIENT'S WORK AND RESPONSIBILITY ON THIS PROJECT. WORKBENCH AND/OR THE COUNTY OF PLUMAS SHALL NOT BE RESPONSIBLE FOR TRANSLATION ERRORS.

2. THE RECIPIENT RECOGNIZES AND ACKNOWLEDGES THAT THE USE OF THIS INFORMATION WILL BE AT THEIR SOLE RISK AND WITHOUT ANY LIABILITY OR LEGAL EXPOSURE TO WORKBENCH OR THE COUNTY OF PLUMAS. NO WARRANTIES OF ANY NATURE, WHETHER EXPRESS OR IMPLIED, SHALL ATTACH TO THESE DOCUMENTS AND THE INFORMATION CONTAINED THEREON. ANY USE, REUSE, OR ALTERATION OF THESE DOCUMENTS BY THE RECIPIENT OR BY OTHERS WILL BE AT THE RECIPIENT'S RISK AND FULL LEGAL RESPONSIBILITY. FURTHERMORE, THE RECIPIENT WILL, TO THE FULLEST EXTENT PERMITTED BY LAW, INDEMNIFY AND HOLD WORKBENCH AND THE COUNTY OF PLUMAS HARMLESS FROM ANY AND ALL CLAIMS, SUITS, LIABILITY, DEMANDS, JUDGEMENTS, OR COSTS ARISING OUT OF OR RESULTING THERE FROM ON ACCOUNT OF ANY INJURY, DEATH, DAMAGE OR LOSS TO PERSONS OR PROPERTY.

3 THE DESIGNS REPRESENTED BY THESE PLANS ARE COPYRIGHTED AND SUBJECT TO COPYRIGHT PROTECTION. IF THE RECIPIENT DOES NOT AGREE WITH THE ABOVE CONDITIONS, THE RECIPIENT SHOULD NOT PROCEED BEYOND THIS DISCLAIMER.

PLUMAS COUNTY PRE-DESIGNED ADU

PLAN C- TWO BEDROOM ADU
990 GSF

NOT FOR CONSTRUCTION

C - LAKESIDE - FLOORPLAN & ELEVATIONS

A2.0

SCALE : AS NOTED

12/14/2023 10:29:59 AM

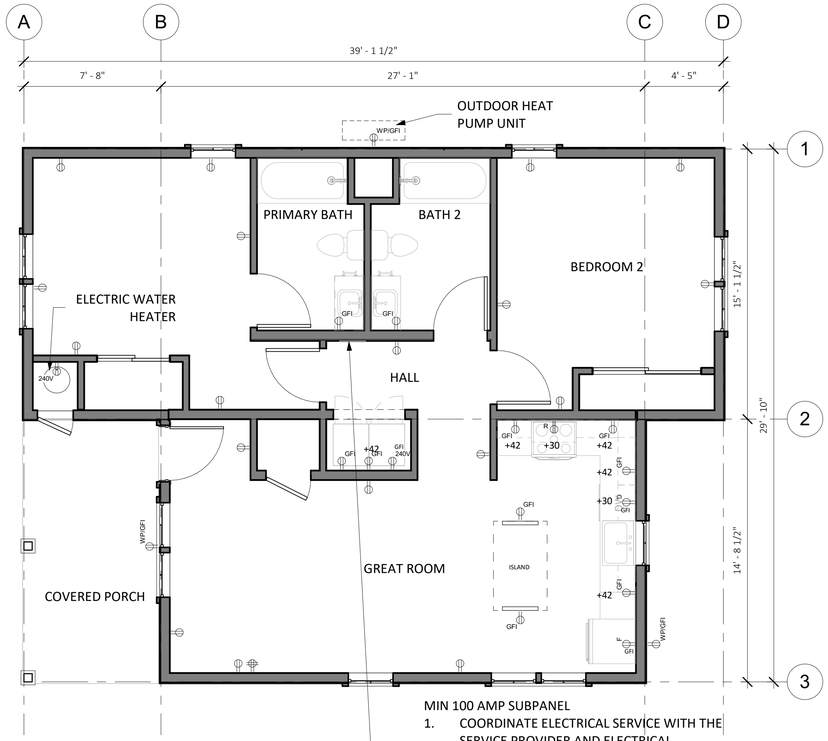

MIN 100 AMP SUBPANEL
1. COORDINATE ELECTRICAL SERVICE WITH THE SERVICE PROVIDER AND ELECTRICAL SUBCONTRACTOR.
2. PROVIDE DISCONNECT SWITCH AT SEPARATE STRUCTURE IF MORE THAN TWO BRANCH CIRCUITS ARE PROPOSED. MINIMUM 225 A BUS BAR REQUIRED.

2 ELECTRICAL PLAN - TWO BEDROOM
1/4" = 1'-0"

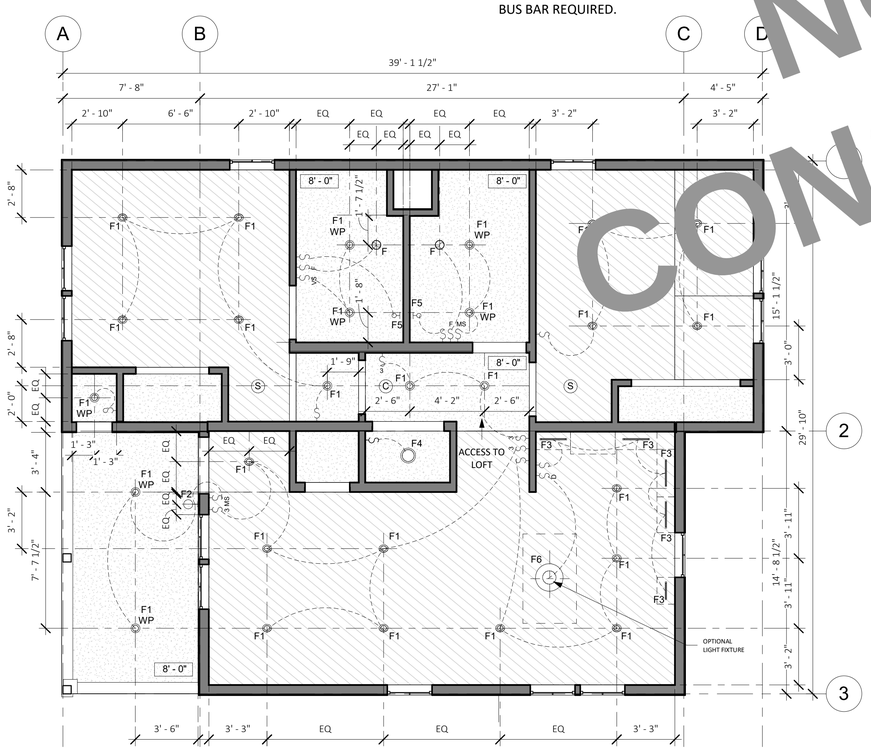

3 RCP - TWO BEDROOM
1/4" = 1'-0"

ROOF PLAN NOTES

1. ROOF DIMENSIONS TAKEN FROM ROOF EDGE/FASCIA TO EXTERIOR FACE OF PLYWOOD. REFER TO REFERENCED DETAILS FOR OVERHANG DIMENSIONS.
2. ALL ROOF AREAS SHALL BE CLASS A RATED COMPOSITION TILES OR EQUAL.
3. WOOD SHINGLES SHALL NOT BE USED.
4. PROVIDE 26 GAUGE CORROSION RESISTANT METAL FLASHING AT ROOF/WALL INTERSECTIONS AND AROUND ROOF OPENINGS.
5. GANG VENTS WHENEVER POSSIBLE.
6. ROOFER AND SOLAR INSTALLER TO COORDINATE INSTALLATION OF PVS AND PV ROOF CLIPS.
7. INSTALL SNOW GUARDS AT METAL ROOFS PER MFG'S. INSTRUCTIONS
8. INSTALL ICE DAM PROTECTION AT ALL ROOF EAVES, VALLEYS AND PITCH CHANGES PER PLUMAS COUNTY AMENDMENTS TO CBC 1507.2.8.2. SEE EAVE DETAILS.

ELECTRICAL LEGEND

- CEILING-MOUNTED EXHAUST UNIT
- DUPLEX RECEPTACLE
- QUAD RECEPTACLE
- GFCI RECEPTACLE
- 220 VOLT RECEPTACLE OUTLET
- DEDICATED OUTLET
- RECESSED LED DOWN LIGHT
- WALL MOUNT LIGHT
- LED STRIP LIGHT
- SWITCH
- DIMMER SWITCH
- MS MOTION-SENSOR SWITCH
- VS VACANCY SWITCH
- F FAN SWITCH/HUMIDITY SENSOR
- SWITCH LEG
- WHOLE HOUSE VENTILATION FAN PER ASHRAE 62.2, DUCT TO EXTERIOR PER MANUFACTURER'S SPECIFICATIONS
- 3 3 WAY SWITCH

NOTE: SEE ELECTRICAL NOTES ON SHEET G1.0

REFLECTED CEILING PLAN NOTES

1. LIGHT FIXTURE DIMENSIONS ARE TO CENTERLINE OF FIXTURE AND FACE OF FINISH AT WALL.
2. PROVIDED TOTALS OF LIGHT FIXTURES ARE FOR REFERENCE ONLY. ACTUAL TOTALS TO BE VERIFIED BY CONTRACTOR.
3. SMOKE DETECTORS SHALL BE LISTED FOR USE WITHIN 10 FEET OF A COOKING APPLIANCE.

REFLECTED CEILING PLAN LEGEND

- GYP. BD. CLG., PTD.
- 8' - 0" FRAMED CEILING HEIGHT A.F.F.
- (S) **PHOTOELECTRIC** CEILING MOUNTED SMOKE DETECTOR. HARDWIRED WITH BATTERY BACKUP. OWNER TO APPROVE SELECTION PRIOR TO PURCHASE. ALL SMOKE DETECTORS SHALL COMPLY WITH 2022 C.R.C. SECTION R314 AND SHALL BE 120V STATE FIRE MARSHAL APPROVED DEVICES INSTALLED IN ACCORDANCE WITH THEIR LISTING.
- (C) CARBON MONOXIDE DETECTOR COMBINATION SMOKE DETECTOR AND CARBON MONOXIDE DETECTOR TO BE CEILING MOUNTED. HARDWIRED WITH BATTERY BACKUP. OWNER TO APPROVE SELECTION PRIOR TO PURCHASE. CARBON MONOXIDE ALARMS COMBINED WITH SMOKE ALARMS SHALL COMPLY WITH 2022 C.R.C. SECTION 315, ALL APPLICABLE STANDARDS, AND REQUIREMENTS FOR LISTINGS AND APPROVAL BY THE OFFICE OF THE STATE FIRE MARSHAL.

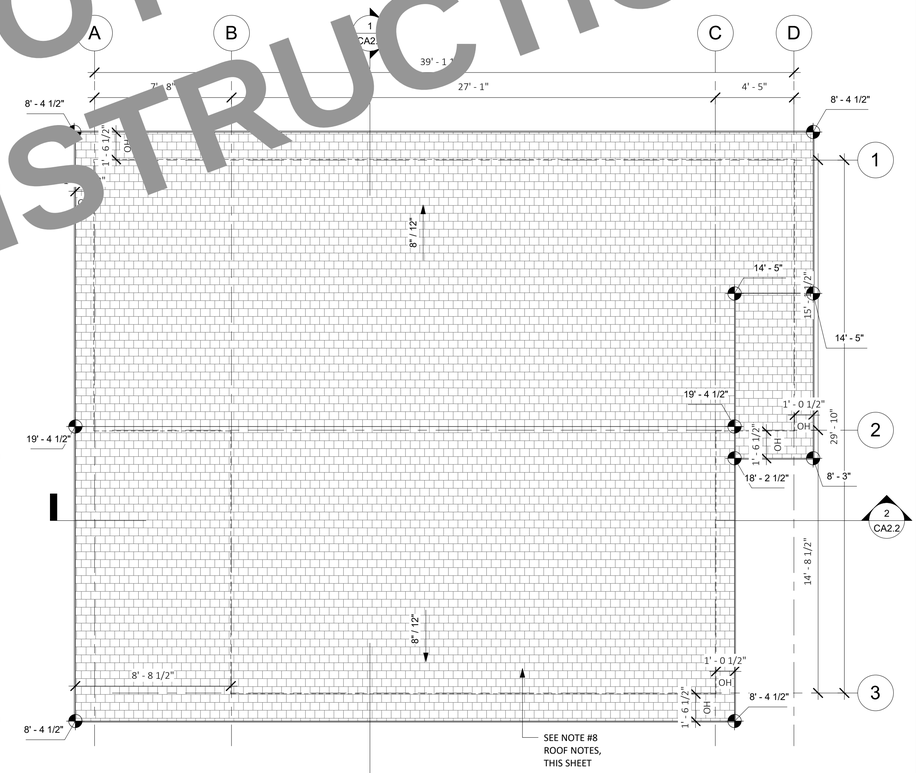

1 ROOF PLAN - LAKESIDE
1/4" = 1'-0"

LIGHTING NOTES

1. ALL PERMANENTLY INSTALLED LUMINAIRES SHALL BE CLASSIFIED HIGH LUMINOUS EFFICACY, AS SPECIFIED IN CEC 150.0(K). RECESSED DOWLIGHT LUMINAIRES MUST CONTAIN LIGHT SOURCES THAT ARE JA8-CERTIFIED, MUST NOT CONTAIN SCREW-BASED LAMPS AND MUST NOT CONTAIN LIGHT SOURCES THAT ARE FOR USE IN ENCLOSED LUMINAIRES OR NOT FOR USE IN RECESSED LUMINAIRES.
2. FOR ENCLOSED LUMINAIRES AND RECESSED LUMINAIRES OTHER THAN CEILING-RECESSED DOWNLIGHTS, THE INSTALLED LIGHT SOURCES MUST BE JA8-COMPLIANT AND MEET THE ELEVATED TEMPERATURES TESTING REQUIREMENT.
3. THE FOLLOWING SPACES ARE REQUIRED TO HAVE AT LEAST ONE INSTALLED LUMINAIRE IN THE SPACE CONTROLLED BY AN OCCUPANCY OR VACANCY SENSORY PROVIDING AUTOMATIC-OFF FUNCTIONALITY:
   A. BATHROOMS
   B. GARAGES
   C. LAUNDRY ROOMS
   D. UTILITY ROOMS
   E. WALK-IN CLOSETS
4. THE NUMBER OF BLANK ELECTRICAL BOXES MORE THAN 5 FEET ABOVE THE FINISHED FLOOR SHALL NOT BE GREATER THAN THE NUMBER OF BEDROOMS. THESE BOXES SHALL BE CONTROLLED BY A DIMMER, VACANCY SENSOR, OR FAN SPEED CONTROL. CEC 150.0(K)8.
5. EXHAUST FANS (EXCLUDING KITCHEN EXHAUST HOOD) SHALL BE SWITCHED SEPARATE FROM LIGHTING (OR UTILIZE A DEVICE WHERE LIGHTING CAN BE TURNED OFF WHILE FAN IS RUNNING).
6. PROVIDE SEPARATE SWITCHING FOR ANY UNDER CABINET LIGHTING FROM OTHER LIGHTING SYSTEMS CEC150.0(K)2L.
7. ALL RECESSED DOWNLIGHT LUMINARIES IN CEILINGS SHALL MEET ALL OF THE FOLLOWING REQUIREMENTS:
   A. BE LISTED, AS DEFINED ON SECTION 100.1, FOR ZERO CLEARANCE INSULATION CONTACT(IC) BY UNDERWRITERS LABORATORY OR OTHER NATIONALLY RECOGNIZED TESTING/RATING LABORATORY; AND
   B. HAVE A LABEL THAT CERTIFIES THE LUMINAIRE IS AIRTIGHT WITH AIR LEAKAGE LESS THAN 2.0 CFM AT 75 PASCALS WHEN TESTED IN ACCORDANCE WITH ASTM E283. ANY EXHAUST FAN HOUSING SHALL NOT BE REQUIRED TO BE CERTIFIED AIRTIGHT; AND
   C. BE SEALED WITH A GASKET OR CAULK BETWEEN THE LUMINAIRE HOUSING AND CEILING, AND SHALL HAVE ALL AIR LEAK PATHS BETWEEN CONDITIONED AND UNCONDITIONED SPACES SEALED WITH A GASKET OUR CAULK; AND
   D. FOR LUMINAIRES WITH HARDWIRED BALLASTS OR DRIVERS, ALLOW BALLAST OR DRIVER MAINTENANCE AND REPLACEMENT TO BE READILY ACCESSIBLE TO BUILDING OCCUPANTS FROM BELOW CEILING WITHOUT REQUIRING THE CUTTING OF HOLES IN THE CEILING; AND
   E. SHALL NOT CONTAIN SCREW-BASED SOCKETS; AND
   F. SHALL CONTAIN LIGHT SOURCES THAT COMPLY WITH REFERENCES JOINT APPENDIX JA8, INCLUDING THE ELEVATED TEMPERATURE REQUIREMENTS, AND THAT ARE MARKED "JAS-2022-E" AS SPECIFIED IN REFERENCE JOINT APPENDIX JA8.
8. ALL OUTDOOR LIGHTING SHALL BE HIGH EFFICACY WITH MANUAL ON/OFF SWITCH AND ONE OF THE FOLLOWING IN ACCORDANCE WITH CEC 150.0(K)3
   A. PHOTOCONTROL AND MOTION SENSOR
   B. PHOTOCONTROL AND AUTO TIME SWITCH CONTROL
   C. ASTRONOMICAL TIME SWITCH CONTROL
   D. ENERGY MANAGEMENT CONTROL SYSTEMS
9. ALL LIGHT FIXTURES LOCATED IN TUB OR SHOWER ENCLOSURE SHALL BE LABELLED "SUITABLE FOR WET LOCATIONS" CEC 410.10A
10. ALL EXTERIOR LIGHTING TO COMPLY WITH THE DARK SKY REGULATION; FIXTURES MUST HAVE A FULLY SHIELDED TOP DIRECTING THE LIGHT DOWNWARD AND A COLOR TEMPERATURE OF 3000K OR LESS.
11. STORAGE OR EQUIPMENT SPACES. FOR ATTICS, UNDERFLOOR SPACES, UTILITY ROOMS, AND BASEMENTS, AT LEAST ONE LIGHTING OUTLET CONTAINING A SWITCH OR CONTROLLED BY A WALL SWITCH SHALL BE INSTALLED WHERE THESE SPACES ARE USED FOR STORAGE OR CONTAIN EQUIPMENT REQUIRING SERVICING OR REPLACEMENT. AT LEAST ONE POINT OF CONTROL SHALL BE AT THE USUAL POINT OF ENTRY TO THESE SPACES. THE LIGHTING OUTLET SHALL BE PROVIDED AT OR NEAR THE EQUIPMENT REQUIRING SERVICING OR REPLACEMENT. CEC 210.70(A)(3)

workbench
189 WALNUT AVENUE
SANTA CRUZ, CA 95060
WORKBENCHBUILT.COM
P: 831.227.2217

BY USING THESE PRE-DESIGNED ADU PLANS, THE RECIPIENT IS ACKNOWLEDGING ACCEPTANCE OF THE FOLLOWING CONDITIONS.

1. THE USE OF THIS INFORMATION IS RESTRICTED TO THE ORIGINAL PROJECT FOR WHICH IT WAS PREPARED (THE PRE-DESIGNED ADU PLANS FOR THE COUNTY OF PLUMAS CALIFORNIA). USE OF THESE PLANS DOES NOT ELIMINATE OR REDUCE THE RECIPIENT'S RESPONSIBILITY TO VERIFY ANY AND ALL INFORMATION RELEVANT TO THE RECIPIENT'S WORK AND RESPONSIBILITY ON THIS PROJECT. WORKBENCH AND/OR THE COUNTY OF PLUMAS SHALL NOT BE RESPONSIBLE FOR TRANSLATION ERRORS.

2. THE RECIPIENT RECOGNIZES AND ACKNOWLEDGES THAT THE USE OF THIS INFORMATION WILL BE AT THEIR SOLE RISK AND WITHOUT ANY LIABILITY OR LEGAL EXPOSURE TO WORKBENCH OR THE COUNTY OF PLUMAS. NO WARRANTIES OF ANY NATURE, WHETHER EXPRESS OR IMPLIED, SHALL ATTACH TO THESE DOCUMENTS AND THE INFORMATION CONTAINED THEREON. ANY USE, REUSE, OR ALTERATION OF THESE DOCUMENTS BY THE RECIPIENT OR BY OTHERS WILL BE AT THE RECIPIENT'S RISK AND FULL LEGAL RESPONSIBILITY. FURTHERMORE, THE RECIPIENT WILL, TO THE FULLEST EXTENT PERMITTED BY LAW, INDEMNIFY AND HOLD WORKBENCH AND THE COUNTY OF PLUMAS HARMLESS FROM ANY AND ALL CLAIMS, SUITS, LIABILITY, DEMANDS, JUDGEMENTS, OR COSTS ARISING OUT OF OR RESULTING THERE FROM ON ACCOUNT OF ANY INJURY, DEATH, DAMAGE OR LOSS TO PERSONS OR PROPERTY.

3 THE DESIGNS REPRESENTED BY THESE PLANS ARE COPYRIGHTED AND SUBJECT TO COPYRIGHT PROTECTION. IF THE RECIPIENT DOES NOT AGREE WITH THE ABOVE CONDITIONS, THE RECIPIENT SHOULD NOT PROCEED BEYOND THIS DISCLAIMER.

PLUMAS COUNTY PRE-DESIGNED ADU

PLAN C- TWO BEDROOM ADU
990 GSF

NOT FOR CONSTRUCTION

C - LAKESIDE - ROOF PLAN, ELECTRICAL & RCP

A2.1

SCALE : AS NOTED

12/14/2023 10:30:01 AM

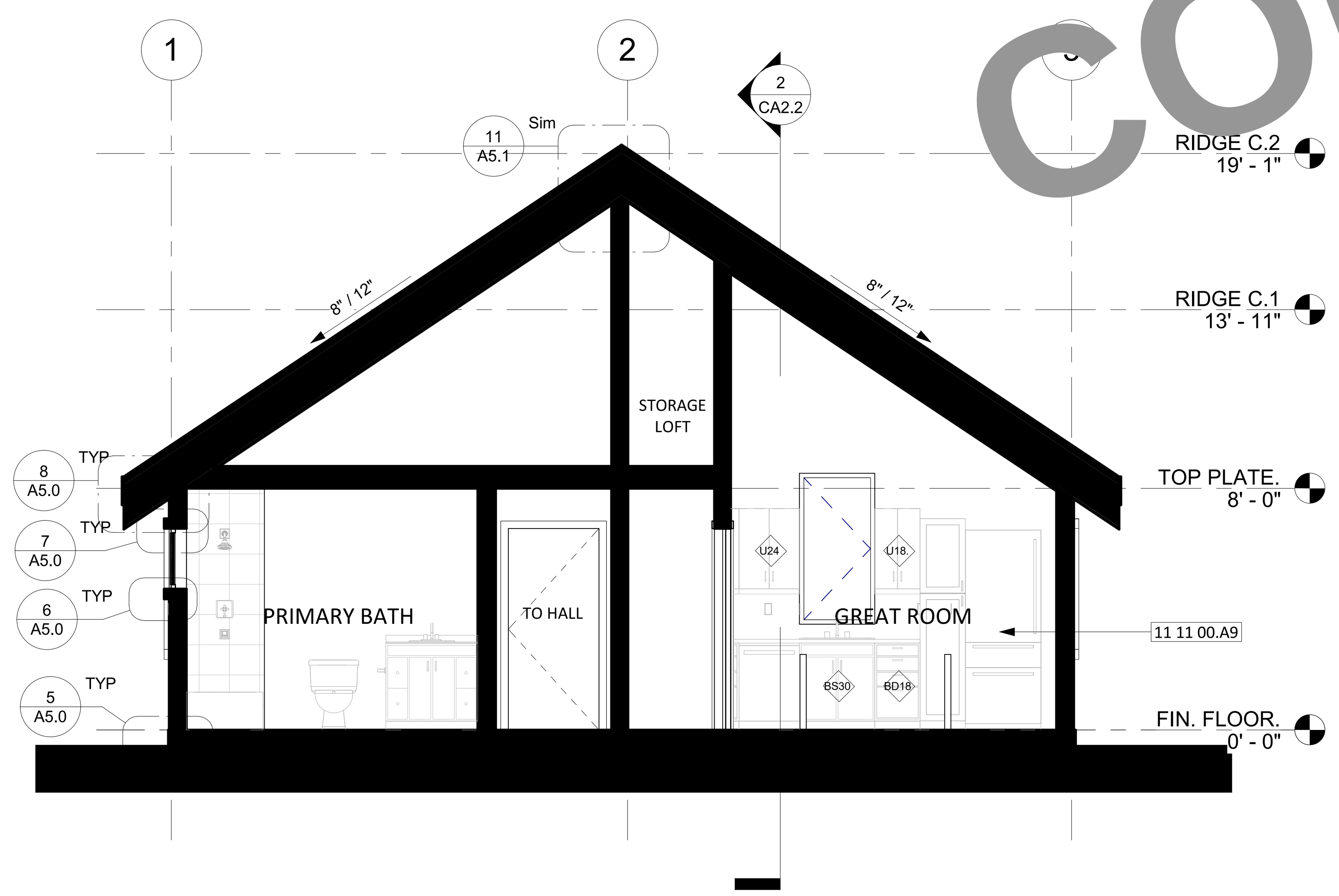

1 CROSS SECTION - LAKESIDE
1/4" = 1'-0"

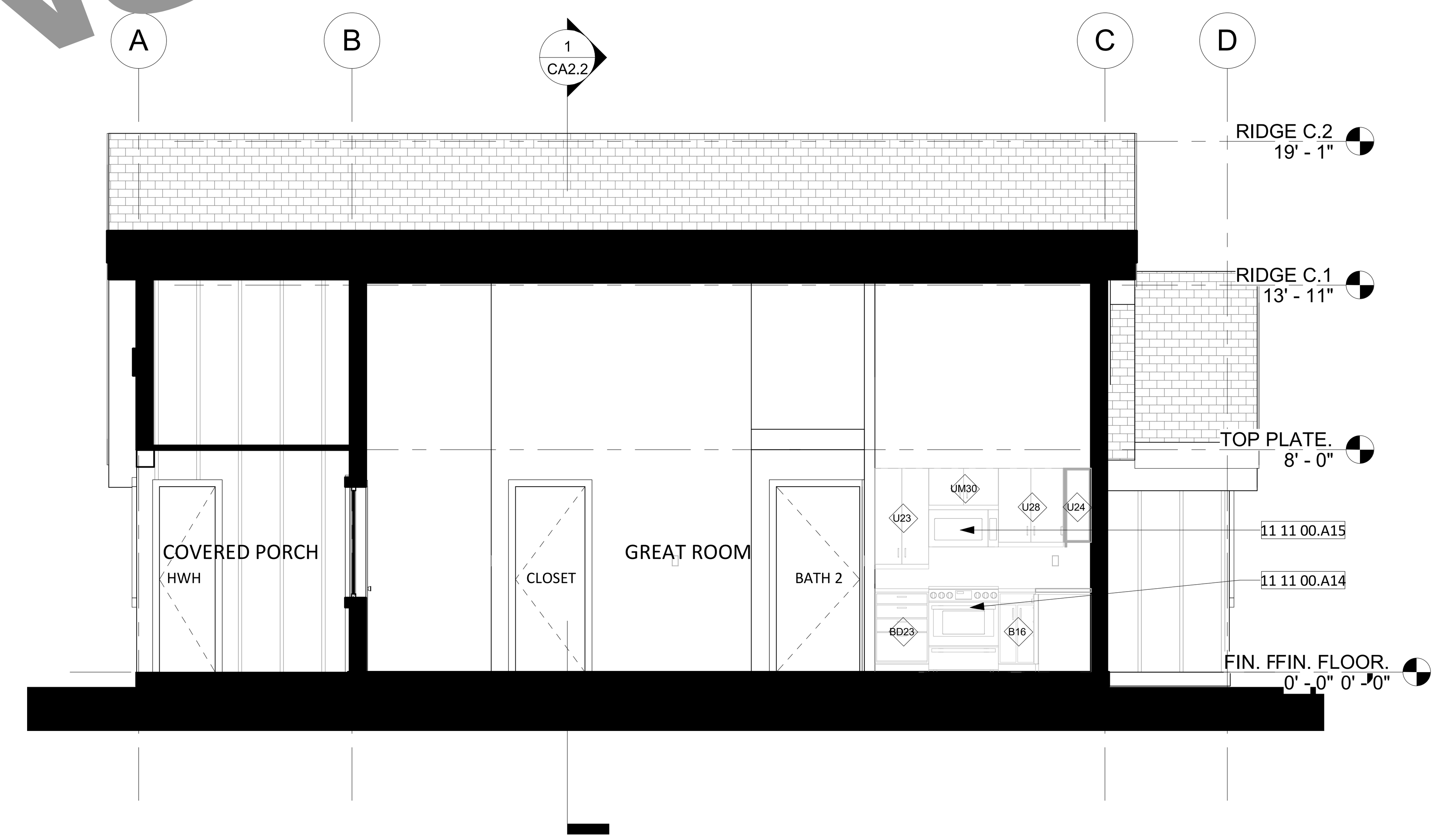

2 LONGITUDINAL SECTION 1 - LAKESIDE
1/4" = 1'-0"

12/14/2023 10:30:04 AM

KITCHEN KEYNOTES

TAG	DESCRIPTION
CABINET WIDTH	
B16	16" BASE CABINET
BD18	18" BASE CABINET - DRAWERS
BD20	20" BASE CABINET - DRAWERS
BD23	23" BASE CABINET - DRAWERS
U18.	24" UPPER CABINET
U23	23" UPPER CABINET
U24	24" UPPER CABINET
U28	28" UPPER CABINET
U32	27" UPPER CABINET
UM30	30" UPPER CABINET - ABOVE MICROWAVE
APPLIANCES	
11 11 00.A1	24" CLOTHES DRYER (HOMEOWNER PROVIDED)
11 11 00.A2	24" CLOTHES WASHER (HOMEOWNER PROVIDED)
11 11 00.A4	24" DISHWASHER
11 11 00.A8	24" STACKED CLOTHES DRYER
11 11 00.A14	30" ELECTRIC RANGE
11 11 00.A15	30" MICROWAVE / HOOD VENT COMBO UNIT
11 11 00.A9	30" REFRIGERATOR
PLUMBING	
22 40 00.A4	30" KITCHEN SINK/FAUCET

workbench

189 WALNUT AVENUE
SANTA CRUZ, CA 95060
WORKBENCHBUILT.COM
P: 831.227.2217

BY USING THESE PRE-DESIGNED ADU PLANS, THE RECIPIENT IS ACKNOWLEDGING ACCEPTANCE OF THE FOLLOWING CONDITIONS.

1. THE USE OF THIS INFORMATION IS RESTRICTED TO THE ORIGINAL PROJECT FOR WHICH IT WAS PREPARED (THE PRE-DESIGNED ADU PLANS FOR THE COUNTY OF PLUMAS CALIFORNIA). USE OF THESE PLANS DOES NOT ELIMINATE OR REDUCE THE RECIPIENT'S RESPONSIBILITY TO VERIFY ANY AND ALL INFORMATION RELEVANT TO THE RECIPIENT'S WORK AND RESPONSIBILITY ON THIS PROJECT. WORKBENCH AND/OR THE COUNTY OF PLUMAS SHALL NOT BE RESPONSIBLE FOR TRANSLATION ERRORS.

2. THE RECIPIENT RECOGNIZES AND ACKNOWLEDGES THAT THE USE OF THIS INFORMATION WILL BE AT THEIR SOLE RISK AND WITHOUT ANY LIABILITY OR LEGAL EXPOSURE TO WORKBENCH OR THE COUNTY OF PLUMAS. NO WARRANTIES OF ANY NATURE, WHETHER EXPRESS OR IMPLIED, SHALL ATTACH TO THESE DOCUMENTS AND THE INFORMATION CONTAINED THEREON. ANY USE, REUSE, OR ALTERATION OF THESE DOCUMENTS BY THE RECIPIENT OR BY OTHERS WILL BE AT THE RECIPIENT'S RISK AND FULL LEGAL RESPONSIBILITY. FURTHERMORE, THE RECIPIENT WILL, TO THE FULLEST EXTENT PERMITTED BY LAW, INDEMNIFY AND HOLD WORKBENCH AND THE COUNTY OF PLUMAS HARMLESS FROM ANY AND ALL CLAIMS, SUITS, LIABILITY, DEMANDS, JUDGEMENTS, OR COSTS ARISING OUT OF OR RESULTING THERE FROM ON ACCOUNT OF ANY INJURY, DEATH, DAMAGE OR LOSS TO PERSONS OR PROPERTY.

3 THE DESIGNS REPRESENTED BY THESE PLANS ARE COPYRIGHTED AND SUBJECT TO COPYRIGHT PROTECTION. IF THE RECIPIENT DOES NOT AGREE WITH THE ABOVE CONDITIONS, THE RECIPIENT SHOULD NOT PROCEED BEYOND THIS DISCLAIMER.

PLUMAS COUNTY PRE-DESIGNED ADU

PLAN C- TWO BEDROOM ADU
990 GSF

NOT FOR CONSTRUCTION

C - LAKESIDE - SECTIONS

A2.2

SCALE : AS NOTED

NOT FOR CONSTRUCTION

3 RIGHT ELEVATION - GOLDRUSH
1/4" = 1'-0"

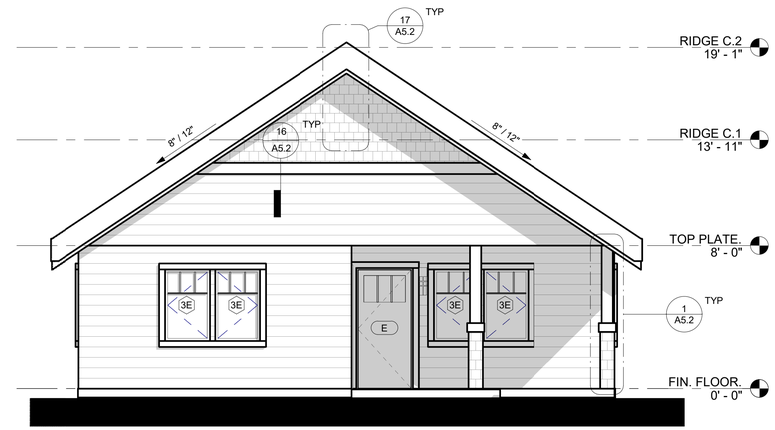

4 LEFT ELEVATION - GOLDRUSH
1/4" = 1'-0"

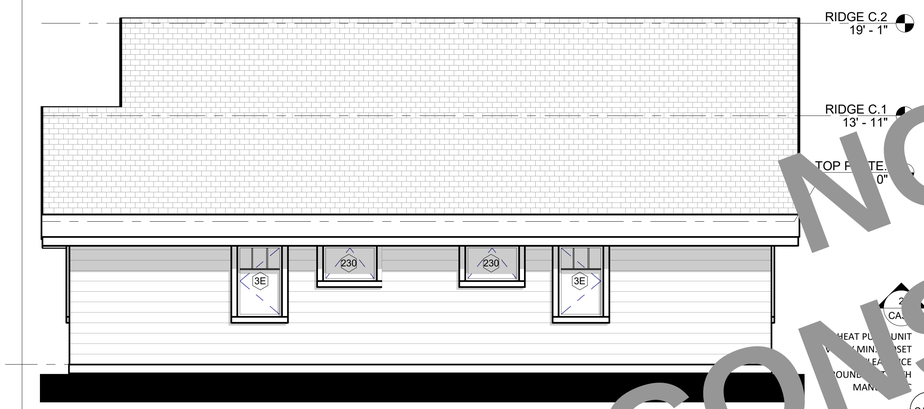

2 REAR ELEVATION - GOLDRUSH
1/4" = 1'-0"

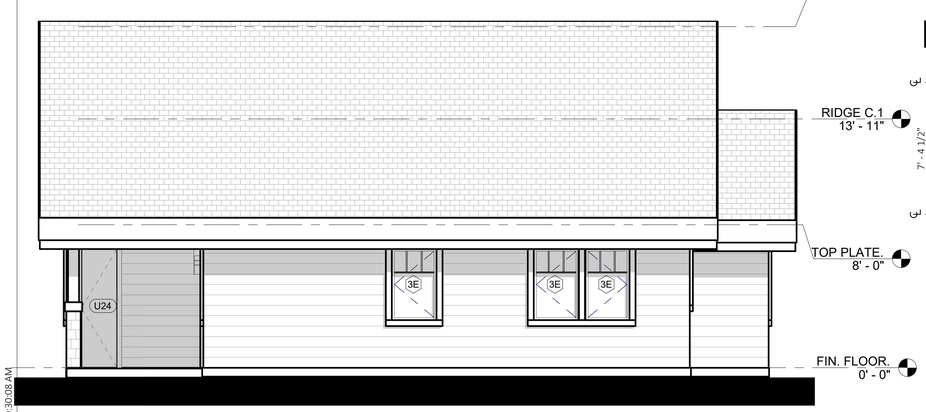

5 FRONT ELEVATION - GOLDRUSH
1/4" = 1'-0"

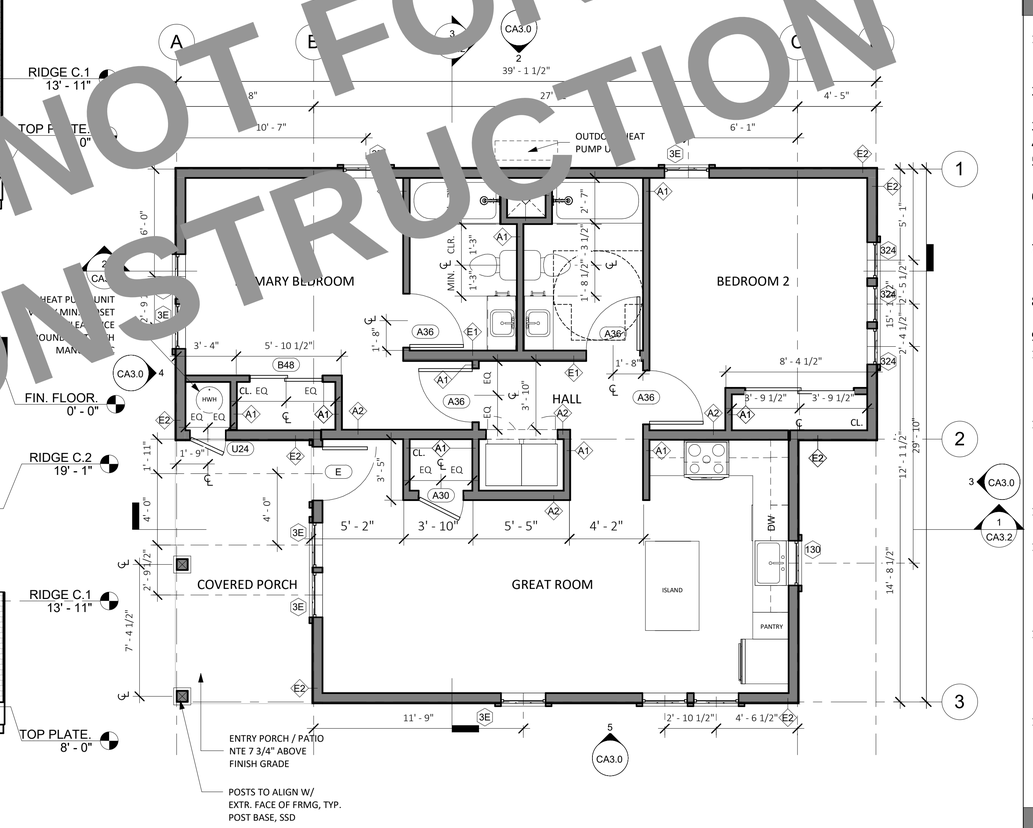

1 PLAN - TWO BEDROOM (990 GSF)
1/4" = 1'-0"

NOT FOR CONSTRUCTION

12/14/2023 10:30:08 AM

FLOORPLAN LEGEND

- (N) PARTITION
- CONCRETE SLAB (ARCHITECTURAL)
- (N) OUTLET AT 18", U.O.N
- (N) LIGHT SWITCH

GRAPHIC LEGEND

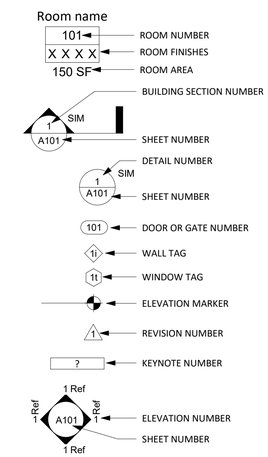

FLOOR PLAN NOTES

1. FLOORPLAN DIMENSIONS ARE TO FACE OF FRAMING OF SCHEDULED PARTITION OR GRIDLINE, UNLESS OTHERWISE NOTED.
2. ALL INTERIOR WALLS ARE TYPE A1 UNLESS OTHERWISE NOTED.
3. SEE SHEET A5.0 FOR EXTERIOR WALL TYPES AND DETAILS.
4. PROVIDE HANGER ROD AND SHELF AT WARDROBE CLOSETS.
5. WHERE THRESHOLDS ARE REQUIRED, PROVIDE ACCESSIBLE THRESHOLDS WITH MAXIMUM 1/2" ELEVATION CHANGE.
6. PROVIDE STRUCTURAL BACKING IN WALLS TO FACILITATE FUTURE INSTALLATION OF GRAB BARS AT TOILET AND SHOWER.
7. CONTRACTOR TO VERIFY LAYOUT, ROUGH FRAMING AND FINISH DIMS WITH OWNER'S FINAL INTERIOR DOORS AND FINISH SELECTIONS.
8. CONTRACTOR TO VERIFY EQUIPMENT SIZES PRIOR TO FRAMING.
9. FLOOR IN BATHROOMS TO BE NON-SLIP CERAMIC TILE.
10. SHOWER WALL SURFACES SHALL BE FINISHED WITH A NONABSORBENT SURFACE, SUCH SURFACE SHALL EXTEND TO A HEIGHT OF NOT LESS THAN 6 FEET (72 INCHES) ABOVE THE FLOOR. (CRC R307.2)
11. MATERIALS USED AS BACKERS FOR WALL TILE IN TUB AND SHOWER AREAS AND WALL PANELS IN SHOWER AREAS SHALL BE OF MATERIALS LISTED IN THE CRC TABLE R702.4.2, AND INSTALLED IN ACCORDANCE WITH THE MANUFACTURER'S RECOMMENDATIONS.
12. PROVIDE GRAB BAR REINFORCEMENT IN BATHROOMS PER CRC SECTION R327.1.1.
13. SHOWER AND TUB SHOWER COMBINATIONS SHALL BE PROVIDED WITH INDIVIDUAL CONTROL VALVES OF THE PRESSURE BALANCE,THERMOSTATIC, OR COMBINATION PRESSURE BALANCE AND THERMOSTATIC TYPES THAT PROVIDE SCALD AND THERMAL SHOCK PROTECTION.
14. CONTROL VALVES AND SHOWER HEADS SHALL BE ARRANGED SO THAT THE SHOWER HEAD DOES NOT DISCHARGE DIRECTLY AT ENTRANCE TO THE COMPARTMENT SO THAT THE BATHER CAN ADJUST THE VALVES PRIOR TO STEPPING INTO THE SHOWER SPRAY.
15. CLOTHES DRYER MOISTURE EXHAUST DUCTS SHALL TERMINATE OUTSIDE THE BUILDING AND HAVE A BACK-DRAFT DAMPER. EXHAUST DUCT IS LIMITED TO 14' WITH TWO ELBOWS. THIS SHALL BE REDUCED BY 2' FOR EVERY ELBOW IN EXCESS OF TWO.(CMC 504.3)

ELEVATION NOTES

1. ELEVATION DIMENSIONS ARE TO GRIDLINE OR CENTERLINE OF WINDOWS, UNLESS OTHERWISE NOTED.
2. SEE SHEET A5.0 FOR EXTERIOR WALL TYPES AND DETAILS.
3. MATERIALS INDICATED ARE SHOWN GENERICALLY. ACTUAL MATERIALS ARE AS SELECTED BY THE OWNER.

workbench

189 WALNUT AVENUE
SANTA CRUZ, CA 95060
WORKBENCHBUILT.COM
P: 831.227.2217

BY USING THESE PRE-DESIGNED ADU PLANS, THE RECIPIENT IS ACKNOWLEDGING ACCEPTANCE OF THE FOLLOWING CONDITIONS.

1. THE USE OF THIS INFORMATION IS RESTRICTED TO THE ORIGINAL PROJECT FOR WHICH IT WAS PREPARED (THE PRE-DESIGNED ADU PLANS FOR THE COUNTY OF PLUMAS CALIFORNIA). USE OF THESE PLANS DOES NOT ELIMINATE OR REDUCE THE RECIPIENT'S RESPONSIBILITY TO VERIFY ANY AND ALL INFORMATION RELEVANT TO THE RECIPIENT'S WORK AND RESPONSIBILITY ON THIS PROJECT. WORKBENCH AND/OR THE COUNTY OF PLUMAS SHALL NOT BE RESPONSIBLE FOR TRANSLATION ERRORS.

2. THE RECIPIENT RECOGNIZES AND ACKNOWLEDGES THAT THE USE OF THIS INFORMATION WILL BE AT THEIR SOLE RISK AND WITHOUT ANY LIABILITY OR LEGAL EXPOSURE TO WORKBENCH OR THE COUNTY OF PLUMAS. NO WARRANTIES OF ANY NATURE, WHETHER EXPRESS OR IMPLIED, SHALL ATTACH TO THESE DOCUMENTS AND THE INFORMATION CONTAINED THEREON. ANY USE, REUSE, OR ALTERATION OF THESE DOCUMENTS BY THE RECIPIENT OR BY OTHERS WILL BE AT THE RECIPIENT'S RISK AND FULL LEGAL RESPONSIBILITY. FURTHERMORE, THE RECIPIENT WILL, TO THE FULLEST EXTENT PERMITTED BY LAW, INDEMNIFY AND HOLD WORKBENCH AND THE COUNTY OF PLUMAS HARMLESS FROM ANY AND ALL CLAIMS, SUITS, LIABILITY, DEMANDS, JUDGEMENTS, OR COSTS ARISING OUT OF OR RESULTING THERE FROM ON ACCOUNT OF ANY INJURY, DEATH, DAMAGE OR LOSS TO PERSONS OR PROPERTY.

3 THE DESIGNS REPRESENTED BY THESE PLANS ARE COPYRIGHTED AND SUBJECT TO COPYRIGHT PROTECTION. IF THE RECIPIENT DOES NOT AGREE WITH THE ABOVE CONDITIONS, THE RECIPIENT SHOULD NOT PROCEED BEYOND THIS DISCLAIMER.

PLUMAS COUNTY PRE-DESIGNED ADU

PLAN C- TWO BEDROOM ADU
990 GSF

NOT FOR CONSTRUCTION

C - GOLDRUSH - FLOORPLAN & ELEVATIONS

A3.0

SCALE : AS NOTED

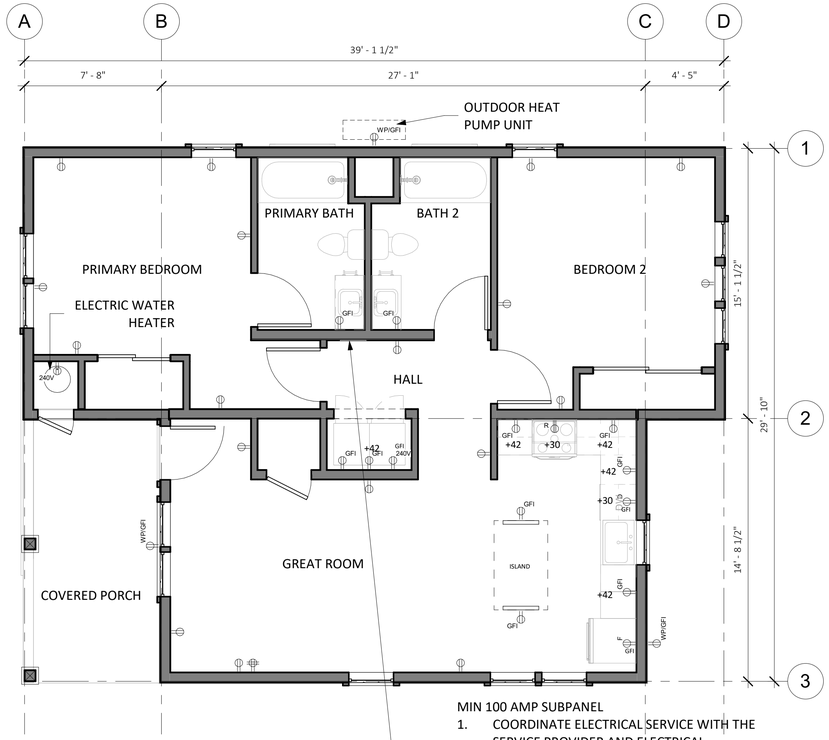

MIN 100 AMP SUBPANEL

1. COORDINATE ELECTRICAL SERVICE WITH THE SERVICE PROVIDER AND ELECTRICAL SUBCONTRACTOR.
2. PROVIDE DISCONNECT SWITCH AT SEPARATE STRUCTURE IF MORE THAN TWO BRANCH CIRCUITS ARE PROPOSED. MINIMUM 2 AMP BUS BAR REQUIRED.

3 ELECTRICAL PLAN - TWO BEDROOM
1/4" = 1'-0"

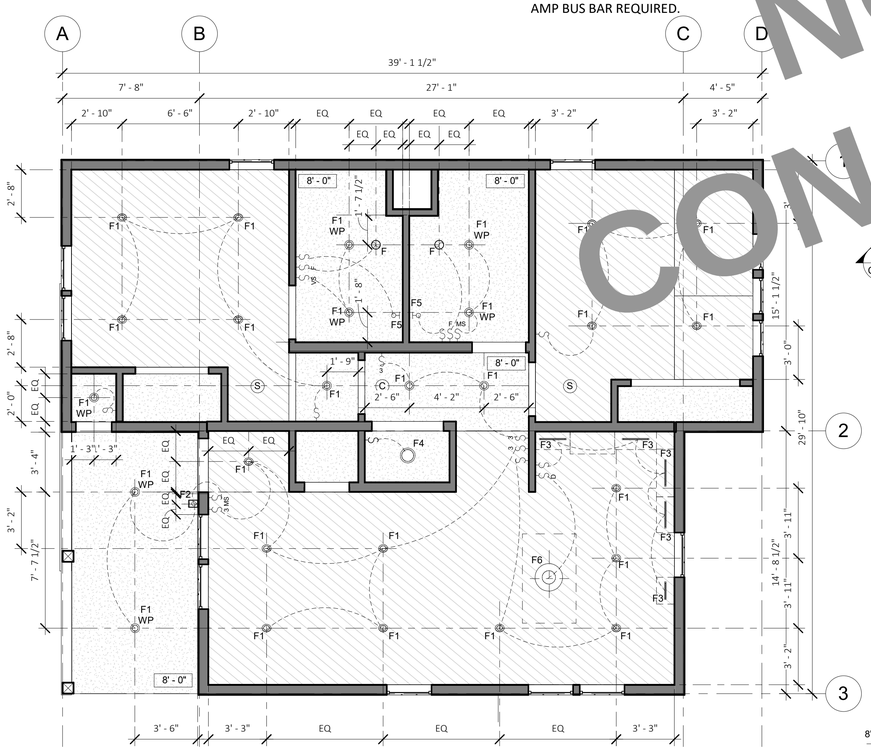

2 RCP - TWO BEDROOM
1/4" = 1'-0"

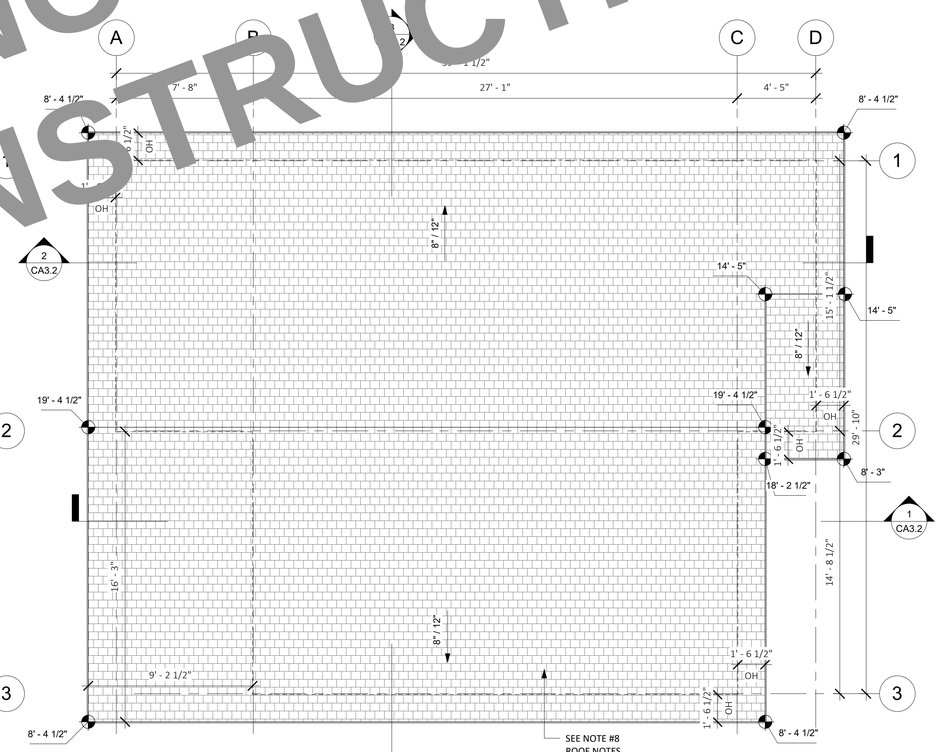

1 ROOF PLAN - GOLDRUSH
1/4" = 1'-0"

ROOF PLAN NOTES

1. ROOF DIMENSIONS TAKEN FROM ROOF EDGE/FASCIA TO EXTERIOR FACE OF PLYWOOD. REFER TO REFERENCED DETAILS FOR OVERHANG DIMENSIONS.
2. ALL ROOF AREAS SHALL BE CLASS A RATED COMPOSITION TILES OR EQUAL.
3. WOOD SHINGLES SHALL NOT BE USED.
4. PROVIDE 26 GAUGE CORROSION RESISTANT METAL FLASHING AT ROOF/WALL INTERSECTIONS AND AROUND ROOF OPENINGS.
5. GANG VENTS WHENEVER POSSIBLE.
6. ROOFER AND SOLAR INSTALLER TO COORDINATE INSTALLATION OF PVS AND PV ROOF CLIPS.
7. INSTALL SNOW GUARDS AT METAL ROOFS PER MFG'S. INSTRUCTIONS
8. INSTALL ICE DAM PROTECTION AT ALL ROOF EAVES, VALLEYS AND PITCH CHANGES PER PLUMAS COUNTY AMENDMENTS TO CBC 1507.2.8.2. SEE EAVE DETAILS.

ELECTRICAL LEGEND

- CEILING-MOUNTED EXHAUST UNIT
- DUPLEX RECEPTACLE
- QUAD RECEPTACLE
- GFCI RECEPTACLE
- 220 VOLT RECEPTACLE OUTLET
- DEDICATED OUTLET
- RECESSED LED DOWN LIGHT
- WALL MOUNT LIGHT
- LED STRIP LIGHT
- SWITCH
- DIMMER SWITCH
- MS MOTION-SENSOR SWITCH
- VS VACANCY SWITCH
- F FAN SWITCH/HUMIDITY SENSOR
- SWITCH LEG
- WHOLE HOUSE VENTILATION FAN PER ASHRAE 62.2, DUCT TO EXTERIOR PER MANUFACTURER'S SPECIFICATIONS
- 3 3 WAY SWITCH

NOTE: SEE ELECTRICAL NOTES ON SHEET G1.0

REFLECTED CEILING PLAN NOTES

1. LIGHT FIXTURE DIMENSIONS ARE TO CENTERLINE OF FIXTURE AND FACE OF FINISH AT WALL.
2. PROVIDED TOTALS OF LIGHT FIXTURES ARE FOR REFERENCE ONLY. ACTUAL TOTALS TO BE VERIFIED BY CONTRACTOR.
3. SMOKE DETECTORS SHALL BE LISTED FOR USE WITHIN 10 FEET OF A COOKING APPLIANCE.

REFLECTED CEILING PLAN LEGEND

- GYP. BD. CLG., PTD.
- 8' - 0" FRAMED CEILING HEIGHT A.F.F.
- (S) **PHOTOELECTRIC** CEILING MOUNTED SMOKE DETECTOR. HARDWIRED WITH BATTERY BACKUP. OWNER TO APPROVE SELECTION PRIOR TO PURCHASE. ALL SMOKE DETECTORS SHALL COMPLY WITH 2022 C.R.C. SECTION R314 AND SHALL BE 120V STATE FIRE MARSHAL APPROVED DEVICES INSTALLED IN ACCORDANCE WITH THEIR LISTING.
- (C) CARBON MONOXIDE DETECTOR COMBINATION SMOKE DETECTOR AND CARBON MONOXIDE DETECTOR TO BE CEILING MOUNTED. HARDWIRED WITH BATTERY BACKUP. OWNER TO APPROVE SELECTION PRIOR TO PURCHASE. CARBON MONOXIDE ALARMS COMBINED WITH SMOKE ALARMS SHALL COMPLY WITH 2022 C.R.C. SECTION 315, ALL APPLICABLE STANDARDS, AND REQUIREMENTS FOR LISTINGS AND APPROVAL BY THE OFFICE OF THE STATE FIRE MARSHAL.

LIGHTING NOTES

1. ALL PERMANENTLY INSTALLED LUMINAIRES SHALL BE CLASSIFIED HIGH LUMINOUS EFFICACY, AS SPECIFIED IN CEC 150.0(K). RECESSED DOWLIGHT LUMINAIRES MUST CONTAIN LIGHT SOURCES THAT ARE JA8-CERTIFIED, MUST NOT CONTAIN SCREW-BASED LAMPS AND MUST NOT CONTAIN LIGHT SOURCES THAT ARE FOR USE IN ENCLOSED LUMINAIRES OR NOT FOR USE IN RECESSED LUMINAIRES.
2. FOR ENCLOSED LUMINAIRES AND RECESSED LUMINAIRES OTHER THAN CEILING-RECESSED DOWNLIGHTS, THE INSTALLED LIGHT SOURCES MUST BE JA8-COMPLIANT AND MEET THE ELEVATED TEMPERATURES TESTING REQUIREMENT.
3. THE FOLLOWING SPACES ARE REQUIRED TO HAVE AT LEAST ONE INSTALLED LUMINAIRE IN THE SPACE CONTROLLED BY AN OCCUPANCY OR VACANCY SENSORY PROVIDING AUTOMATIC-OFF FUNCTIONALITY:
   - A. BATHROOMS
   - B. GARAGES
   - C. LAUNDRY ROOMS
   - D. UTILITY ROOMS
   - E. WALK-IN CLOSETS
4. THE NUMBER OF BLANK ELECTRICAL BOXES MORE THAN 5 FEET ABOVE THE FINISHED FLOOR SHALL NOT BE GREATER THAN THE NUMBER OF BEDROOMS. THESE BOXES SHALL BE CONTROLLED BY A DIMMER, VACANCY SENSOR, OR FAN SPEED CONTROL. CEC 150.0(K)8.
5. EXHAUST FANS (EXCLUDING KITCHEN EXHAUST HOOD) SHALL BE SWITCHED SEPARATE FROM LIGHTING (OR UTILIZE A DEVICE WHERE LIGHTING CAN BE TURNED OFF WHILE FAN IS RUNNING).
6. PROVIDE SEPARATE SWITCHING FOR ANY UNDER CABINET LIGHTING FROM OTHER LIGHTING SYSTEMS CEC150.0(K)2L.
7. ALL RECESSED DOWNLIGHT LUMINARIES IN CEILINGS SHALL MEET ALL OF THE FOLLOWING REQUIREMENTS:
   - A. BE LISTED, AS DEFINED ON SECTION 100.1, FOR ZERO CLEARANCE INSULATION CONTACT(IC) BY UNDERWRITERS LABORATORY OR OTHER NATIONALLY RECOGNIZED TESTING/RATING LABORATORY; AND
   - B. HAVE A LABEL THAT CERTIFIES THE LUMINAIRE IS AIRTIGHT WITH AIR LEAKAGE LESS THAN 2.0 CFM AT 75 PASCALS WHEN TESTED IN ACCORDANCE WITH ASTM E283. ANY EXHAUST FAN HOUSING SHALL NOT BE REQUIRED TO BE CERTIFIED AIRTIGHT; AND
   - C. BE SEALED WITH A GASKET OR CAULK BETWEEN THE LUMINAIRE HOUSING AND CEILING, AND SHALL HAVE ALL AIR LEAK PATHS BETWEEN CONDITIONED AND UNCONDITIONED SPACES SEALED WITH A GASKET OUR CAULK; AND
   - D. FOR LUMINAIRES WITH HARDWIRED BALLASTS OR DRIVERS, ALLOW BALLAST OR DRIVER MAINTENANCE AND REPLACEMENT TO BE READILY ACCESSIBLE TO BUILDING OCCUPANTS FROM BELOW CEILING WITHOUT REQUIRING THE CUTTING OF HOLES IN THE CEILING; AND
   - E. SHALL NOT CONTAIN SCREW-BASED SOCKETS; AND
   - F. SHALL CONTAIN LIGHT SOURCES THAT COMPLY WITH REFERENCES JOINT APPENDIX JA8, INCLUDING THE ELEVATED TEMPERATURE REQUIREMENTS, AND THAT ARE MARKED "JAS-2022-E" AS SPECIFIED IN REFERENCE JOINT APPENDIX JA8.
8. ALL OUTDOOR LIGHTING SHALL BE HIGH EFFICACY WITH MANUAL ON/OFF SWITCH AND ONE OF THE FOLLOWING IN ACCORDANCE WITH CEC 150.0(K)3
   - A. PHOTOCONTROL AND MOTION SENSOR
   - B. PHOTOCONTROL AND AUTO TIME SWITCH CONTROL
   - C. ASTRONOMICAL TIME SWITCH CONTROL
   - D. ENERGY MANAGEMENT CONTROL SYSTEMS
9. ALL LIGHT FIXTURES LOCATED IN TUB OR SHOWER ENCLOSURE SHALL BE LABELLED "SUITABLE FOR WET LOCATIONS" CEC 410.10A
10. ALL EXTERIOR LIGHTING TO COMPLY WITH THE DARK SKY REGULATION; FIXTURES MUST HAVE A FULLY SHIELDED TOP DIRECTING THE LIGHT DOWNWARD AND A COLOR TEMPERATURE OF 3000K OR LESS.
11. STORAGE OR EQUIPMENT SPACES. FOR ATTICS, UNDERFLOOR SPACES, UTILITY ROOMS, AND BASEMENTS, AT LEAST ONE LIGHTING OUTLET CONTAINING A SWITCH OR CONTROLLED BY A WALL SWITCH SHALL BE INSTALLED WHERE THESE SPACES ARE USED FOR STORAGE OR CONTAIN EQUIPMENT REQUIRING SERVICING OR REPLACEMENT. AT LEAST ONE POINT OF CONTROL SHALL BE AT THE USUAL POINT OF ENTRY TO THESE SPACES. THE LIGHTING OUTLET SHALL BE PROVIDED AT OR NEAR THE EQUIPMENT REQUIRING SERVICING OR REPLACEMENT. CEC 210.70(A)(3)

NOT FOR CONSTRUCTION

workbench
189 WALNUT AVENUE
SANTA CRUZ, CA 95060
WORKBENCHBUILT.COM
P: 831.227.2217

BY USING THESE PRE-DESIGNED ADU PLANS, THE RECIPIENT IS ACKNOWLEDGING ACCEPTANCE OF THE FOLLOWING CONDITIONS.

1. THE USE OF THIS INFORMATION IS RESTRICTED TO THE ORIGINAL PROJECT FOR WHICH IT WAS PREPARED (THE PRE-DESIGNED ADU PLANS FOR THE COUNTY OF PLUMAS CALIFORNIA). USE OF THESE PLANS DOES NOT ELIMINATE OR REDUCE THE RECIPIENT'S RESPONSIBILITY TO VERIFY ANY AND ALL INFORMATION RELEVANT TO THE RECIPIENT'S WORK AND RESPONSIBILITY ON THIS PROJECT. WORKBENCH AND/OR THE COUNTY OF PLUMAS SHALL NOT BE RESPONSIBLE FOR TRANSLATION ERRORS.

2. THE RECIPIENT RECOGNIZES AND ACKNOWLEDGES THAT THE USE OF THIS INFORMATION WILL BE AT THEIR SOLE RISK AND WITHOUT ANY LIABILITY OR LEGAL EXPOSURE TO WORKBENCH OR THE COUNTY OF PLUMAS. NO WARRANTIES OF ANY NATURE, WHETHER EXPRESS OR IMPLIED, SHALL ATTACH TO THESE DOCUMENTS AND THE INFORMATION CONTAINED THEREON. ANY USE, REUSE, OR ALTERATION OF THESE DOCUMENTS BY THE RECIPIENT OR BY OTHERS WILL BE AT THE RECIPIENT'S RISK AND FULL LEGAL RESPONSIBILITY. FURTHERMORE, THE RECIPIENT WILL, TO THE FULLEST EXTENT PERMITTED BY LAW, INDEMNIFY AND HOLD WORKBENCH AND THE COUNTY OF PLUMAS HARMLESS FROM ANY AND ALL CLAIMS, SUITS, LIABILITY, DEMANDS, JUDGEMENTS, OR COSTS ARISING OUT OF OR RESULTING THERE FROM ON ACCOUNT OF ANY INJURY, DEATH, DAMAGE OR LOSS TO PERSONS OR PROPERTY.

3 THE DESIGNS REPRESENTED BY THESE PLANS ARE COPYRIGHTED AND SUBJECT TO COPYRIGHT PROTECTION. IF THE RECIPIENT DOES NOT AGREE WITH THE ABOVE CONDITIONS, THE RECIPIENT SHOULD NOT PROCEED BEYOND THIS DISCLAIMER.

PLUMAS COUNTY PRE-DESIGNED ADU

PLAN C- TWO BEDROOM ADU
990 GSF

NOT FOR CONSTRUCTION

C - GOLDRUSH - ROOF PLAN, ELECTRICAL & RCP

A3.1

SCALE : AS NOTED

12/14/2023 10:30:10 AM

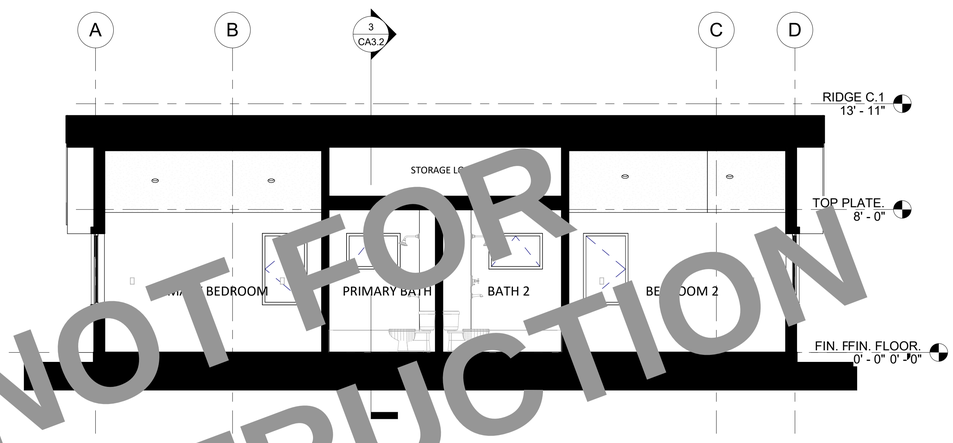

2 LONGITUDINAL SECTION 2 - GOLDRUSH
1/4" = 1'-0"

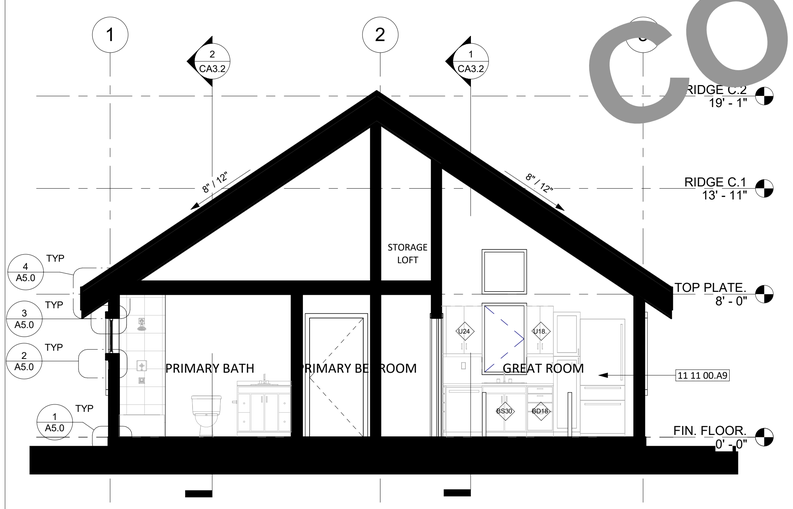

3 CROSS SECTION - GOLDRUSH
1/4" = 1'-0"

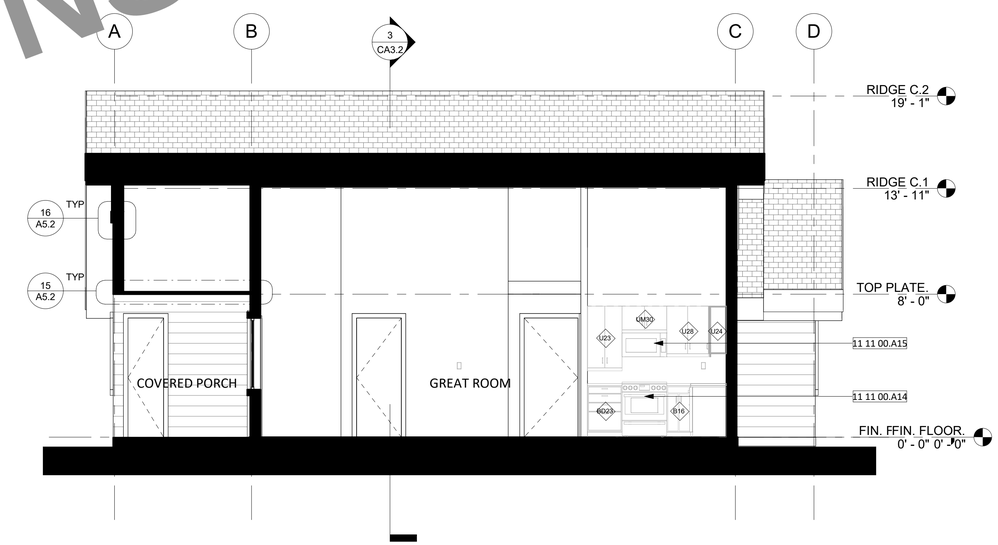

1 LONGITUDINAL SECTION 1 - GOLDRUSH
1/4" = 1'-0"

NOT FOR CONSTRUCTION

KITCHEN KEYNOTES

TAG	DESCRIPTION
CABINET WIDTH	
B16	16" BASE CABINET
BD18	18" BASE CABINET - DRAWERS
BD20	20" BASE CABINET - DRAWERS
BD23	23" BASE CABINET - DRAWERS
U18.	24" UPPER CABINET
U23	23" UPPER CABINET
U24	24" UPPER CABINET
U28	28" UPPER CABINET
U32	27" UPPER CABINET
UM30	30" UPPER CABINET - ABOVE MICROWAVE

APPLIANCES

11 11 00.A1	24" CLOTHES DRYER (HOMEOWNER PROVIDED)
11 11 00.A2	24" CLOTHES WASHER (HOMEOWNER PROVIDED)
11 11 00.A4	24" DISHWASHER
11 11 00.A8	24" STACKED CLOTHES DRYER
11 11 00.A14	30" ELECTRIC RANGE
11 11 00.A15	30" MICROWAVE / HOOD VENT COMBO UNIT
11 11 00.A9	30" REFRIGERATOR

PLUMBING

22 40 00.A4	30" KITCHEN SINK/FAUCET

workbench

189 WALNUT AVENUE
SANTA CRUZ, CA 95060
WORKBENCHBUILT.COM
P: 831.227.2217

BY USING THESE PRE-DESIGNED ADU PLANS, THE RECIPIENT IS ACKNOWLEDGING ACCEPTANCE OF THE FOLLOWING CONDITIONS.

1. THE USE OF THIS INFORMATION IS RESTRICTED TO THE ORIGINAL PROJECT FOR WHICH IT WAS PREPARED (THE PRE-DESIGNED ADU PLANS FOR THE COUNTY OF PLUMAS CALIFORNIA). USE OF THESE PLANS DOES NOT ELIMINATE OR REDUCE THE RECIPIENT'S RESPONSIBILITY TO VERIFY ANY AND ALL INFORMATION RELEVANT TO THE RECIPIENT'S WORK AND RESPONSIBILITY ON THIS PROJECT. WORKBENCH AND/OR THE COUNTY OF PLUMAS SHALL NOT BE RESPONSIBLE FOR TRANSLATION ERRORS.

2. THE RECIPIENT RECOGNIZES AND ACKNOWLEDGES THAT THE USE OF THIS INFORMATION WILL BE AT THEIR SOLE RISK AND WITHOUT ANY LIABILITY OR LEGAL EXPOSURE TO WORKBENCH OR THE COUNTY OF PLUMAS. NO WARRANTIES OF ANY NATURE, WHETHER EXPRESS OR IMPLIED, SHALL ATTACH TO THESE DOCUMENTS AND THE INFORMATION CONTAINED THEREON. ANY USE, REUSE, OR ALTERATION OF THESE DOCUMENTS BY THE RECIPIENT OR BY OTHERS WILL BE AT THE RECIPIENT'S RISK AND FULL LEGAL RESPONSIBILITY. FURTHERMORE, THE RECIPIENT WILL, TO THE FULLEST EXTENT PERMITTED BY LAW, INDEMNIFY AND HOLD WORKBENCH AND THE COUNTY OF PLUMAS HARMLESS FROM ANY AND ALL CLAIMS, SUITS, LIABILITY, DEMANDS, JUDGEMENTS, OR COSTS ARISING OUT OF OR RESULTING THERE FROM ON ACCOUNT OF ANY INJURY, DEATH, DAMAGE OR LOSS TO PERSONS OR PROPERTY.

3 THE DESIGNS REPRESENTED BY THESE PLANS ARE COPYRIGHTED AND SUBJECT TO COPYRIGHT PROTECTION. IF THE RECIPIENT DOES NOT AGREE WITH THE ABOVE CONDITIONS, THE RECIPIENT SHOULD NOT PROCEED BEYOND THIS DISCLAIMER.

PLUMAS COUNTY PRE-DESIGNED ADU

PLAN C- TWO BEDROOM ADU
990 GSF

NOT FOR CONSTRUCTION

C - GOLDRUSH - SECTIONS

A3.2

SCALE : AS NOTED

12/14/2023 10:30:13 AM

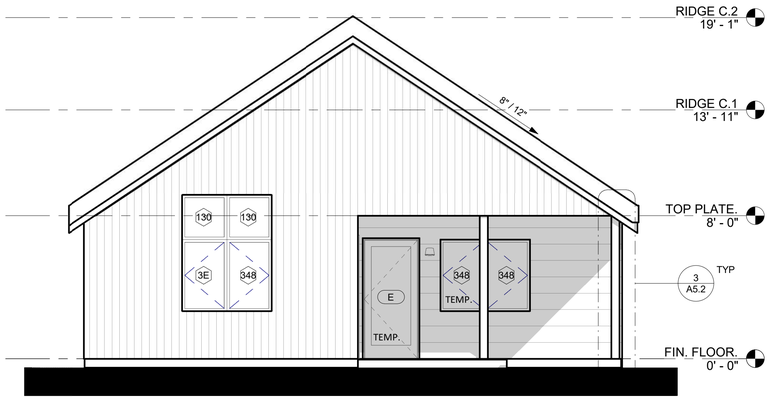

3 LEFT ELEVATION - MEADOW
1/4" = 1'-0"

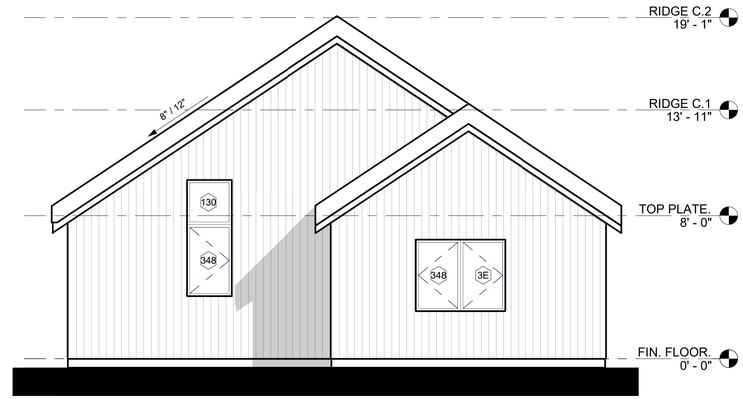

4 RIGHT ELEVATION - MEADOW
1/4" = 1'-0"

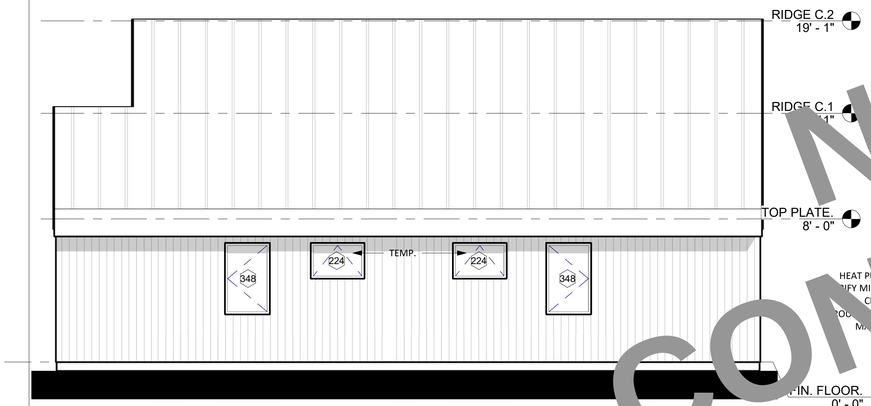

2 REAR ELEVATION - MEADOW
1/4" = 1'-0"

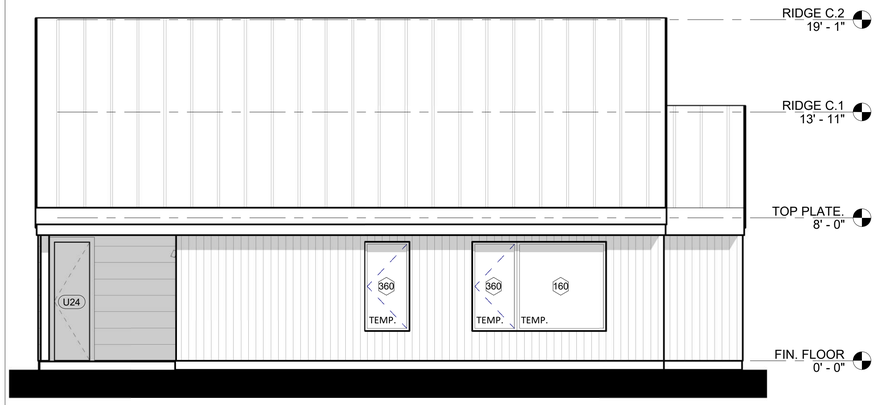

5 FRONT ELEVATION - MEADOW
1/4" = 1'-0"

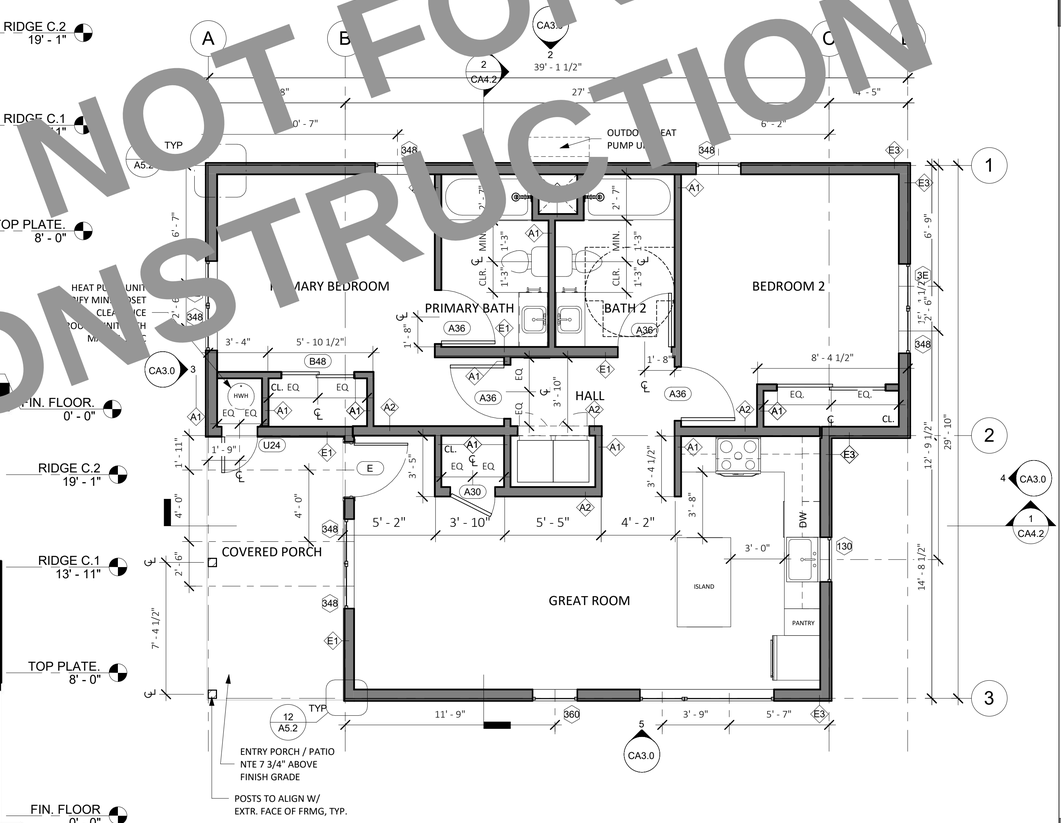

1 PLAN - TWO BEDROOM (990 GSF)
1/4" = 1'-0"

NOT FOR CONSTRUCTION

12/14/2023 10:30:17 AM

FLOORPLAN LEGEND

- (N) PARTITION
- CONCRETE SLAB (ARCHITECTURAL)
- (N) OUTLET AT 18", U.O.N
- (N) LIGHT SWITCH

GRAPHIC LEGEND

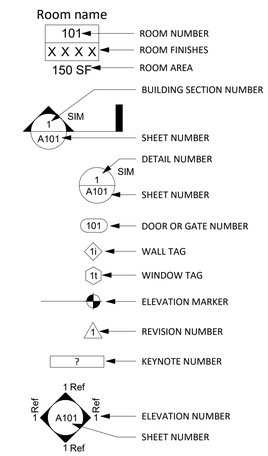

FLOOR PLAN NOTES

1. FLOORPLAN DIMENSIONS ARE TO FACE OF FRAMING OF SCHEDULED PARTITION OR GRIDLINE, UNLESS OTHERWISE NOTED.
2. ALL INTERIOR WALLS ARE TYPE A1 UNLESS OTHERWISE NOTED.
3. SEE SHEET A5.0 FOR EXTERIOR WALL TYPES AND DETAILS.
4. PROVIDE HANGER ROD AND SHELF AT WARDROBE CLOSETS.
5. WHERE THRESHOLDS ARE REQUIRED, PROVIDE ACCESSIBLE THRESHOLDS WITH MAXIMUM 1/2" ELEVATION CHANGE.
6. PROVIDE STRUCTURAL BACKING IN WALLS TO FACILITATE FUTURE INSTALLATION OF GRAB BARS AT TOILET AND SHOWER.
7. CONTRACTOR TO VERIFY LAYOUT, ROUGH FRAMING AND FINISH DIMS WITH OWNER'S FINAL INTERIOR DOORS AND FINISH SELECTIONS.
8. CONTRACTOR TO VERIFY EQUIPMENT SIZES PRIOR TO FRAMING.
9. FLOOR IN BATHROOMS TO BE NON-SLIP CERAMIC TILE.
10. SHOWER WALL SURFACES SHALL BE FINISHED WITH A NONABSORBENT SURFACE, SUCH SURFACE SHALL EXTEND TO A HEIGHT OF NOT LESS THAN 6 FEET (72 INCHES) ABOVE THE FLOOR. (CRC R307.2)
11. MATERIALS USED AS BACKERS FOR WALL TILE IN TUB AND SHOWER AREAS AND WALL PANELS IN SHOWER AREAS SHALL BE OF MATERIALS LISTED IN THE CRC TABLE R702.4.2, AND INSTALLED IN ACCORDANCE WITH THE MANUFACTURER'S RECOMMENDATIONS.
12. PROVIDE GRAB BAR REINFORCEMENT IN BATHROOMS PER CRC SECTION R327.1.1.
13. SHOWER AND TUB SHOWER COMBINATIONS SHALL BE PROVIDED WITH INDIVIDUAL CONTROL VALVES OF THE PRESSURE BALANCE,THERMOSTATIC, OR COMBINATION PRESSURE BALANCE AND THERMOSTATIC TYPES THAT PROVIDE SCALD AND THERMAL SHOCK PROTECTION.
14. CONTROL VALVES AND SHOWER HEADS SHALL BE ARRANGED SO THAT THE SHOWER HEAD DOES NOT DISCHARGE DIRECTLY AT ENTRANCE TO THE COMPARTMENT SO THAT THE BATHER CAN ADJUST THE VALVES PRIOR TO STEPPING INTO THE SHOWER SPRAY.
15. CLOTHES DRYER MOISTURE EXHAUST DUCTS SHALL TERMINATE OUTSIDE THE BUILDING AND HAVE A BACK-DRAFT DAMPER. EXHAUST DUCT IS LIMITED TO 14' WITH TWO ELBOWS. THIS SHALL BE REDUCED BY 2' FOR EVERY ELBOW IN EXCESS OF TWO.(CMC 504.3)

ELEVATION NOTES

1. ELEVATION DIMENSIONS ARE TO GRIDLINE OR CENTERLINE OF WINDOWS, UNLESS OTHERWISE NOTED.
2. SEE SHEET A5.0 FOR EXTERIOR WALL TYPES AND DETAILS.
3. MATERIALS INDICATED ARE SHOWN GENERICALLY. ACTUAL MATERIALS ARE AS SELECTED BY THE OWNER.

workbench

189 WALNUT AVENUE
SANTA CRUZ, CA 95060
WORKBENCHBUILT.COM
P: 831.227.2217

BY USING THESE PRE-DESIGNED ADU PLANS, THE RECIPIENT IS ACKNOWLEDGING ACCEPTANCE OF THE FOLLOWING CONDITIONS.

1. THE USE OF THIS INFORMATION IS RESTRICTED TO THE ORIGINAL PROJECT FOR WHICH IT WAS PREPARED (THE PRE-DESIGNED ADU PLANS FOR THE COUNTY OF PLUMAS CALIFORNIA). USE OF THESE PLANS DOES NOT ELIMINATE OR REDUCE THE RECIPIENT'S RESPONSIBILITY TO VERIFY ANY AND ALL INFORMATION RELEVANT TO THE RECIPIENT'S WORK AND RESPONSIBILITY ON THIS PROJECT. WORKBENCH AND/OR THE COUNTY OF PLUMAS SHALL NOT BE RESPONSIBLE FOR TRANSLATION ERRORS.

2. THE RECIPIENT RECOGNIZES AND ACKNOWLEDGES THAT THE USE OF THIS INFORMATION WILL BE AT THEIR SOLE RISK AND WITHOUT ANY LIABILITY OR LEGAL EXPOSURE TO WORKBENCH OR THE COUNTY OF PLUMAS. NO WARRANTIES OF ANY NATURE, WHETHER EXPRESS OR IMPLIED, SHALL ATTACH TO THESE DOCUMENTS AND THE INFORMATION CONTAINED THEREON. ANY USE, REUSE, OR ALTERATION OF THESE DOCUMENTS BY THE RECIPIENT OR BY OTHERS WILL BE AT THE RECIPIENT'S RISK AND FULL LEGAL RESPONSIBILITY. FURTHERMORE, THE RECIPIENT WILL, TO THE FULLEST EXTENT PERMITTED BY LAW, INDEMNIFY AND HOLD WORKBENCH AND THE COUNTY OF PLUMAS HARMLESS FROM ANY AND ALL CLAIMS, SUITS, LIABILITY, DEMANDS, JUDGEMENTS, OR COSTS ARISING OUT OF OR RESULTING THERE FROM ON ACCOUNT OF ANY INJURY, DEATH, DAMAGE OR LOSS TO PERSONS OR PROPERTY.

3 THE DESIGNS REPRESENTED BY THESE PLANS ARE COPYRIGHTED AND SUBJECT TO COPYRIGHT PROTECTION. IF THE RECIPIENT DOES NOT AGREE WITH THE ABOVE CONDITIONS, THE RECIPIENT SHOULD NOT PROCEED BEYOND THIS DISCLAIMER.

PLUMAS COUNTY PRE-DESIGNED ADU

PLAN C- TWO BEDROOM ADU

990 GSF

NOT FOR CONSTRUCTION

C - MEADOW - FLOORPLAN & ELEVATIONS

A4.0

SCALE : AS NOTED

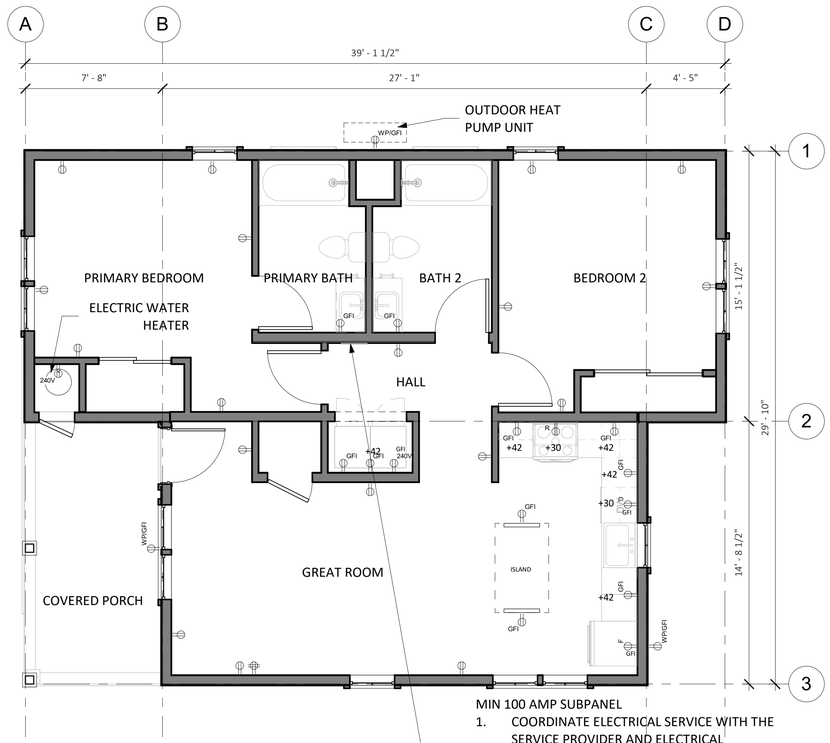

MIN 100 AMP SUBPANEL

1. COORDINATE ELECTRICAL SERVICE WITH THE SERVICE PROVIDER AND ELECTRICAL SUBCONTRACTOR.
2. PROVIDE DISCONNECT SWITCH AT SEPARATE STRUCTURE IF MORE THAN TWO BRANCH CIRCUITS ARE PROPOSED. MINIMUM 22[illegible] BUS BAR REQUIRED.

2 ELECTRICAL PLAN - TWO BEDROOM
1/4" = 1'-0"

ROOF PLAN NOTES

1. ROOF DIMENSIONS TAKEN FROM ROOF EDGE/FASCIA TO EXTERIOR FACE OF PLYWOOD. REFER TO REFERENCED DETAILS FOR OVERHANG DIMENSIONS.
2. ALL ROOF AREAS SHALL BE CLASS A RATED COMPOSITION TILES OR EQUAL.
3. WOOD SHINGLES SHALL NOT BE USED.
4. PROVIDE 26 GAUGE CORROSION RESISTANT METAL FLASHING AT ROOF/WALL INTERSECTIONS AND AROUND ROOF OPENINGS.
5. GANG VENTS WHENEVER POSSIBLE.
6. ROOFER AND SOLAR INSTALLER TO COORDINATE INSTALLATION OF PVS AND PV ROOF CLIPS.
7. INSTALL SNOW GUARDS AT METAL ROOFS PER MFG'S. INSTRUCTIONS
8. INSTALL ICE DAM PROTECTION AT ALL ROOF EAVES, VALLEYS AND PITCH CHANGES PER PLUMAS COUNTY AMENDMENTS TO CBC 1507.2.8.2. SEE EAVE DETAILS.

ELECTRICAL LEGEND

- CEILING-MOUNTED EXHAUST UNIT
- DUPLEX RECEPTACLE
- QUAD RECEPTACLE
- GFCI RECEPTACLE
- 220 VOLT RECEPTACLE OUTLET
- DEDICATED OUTLET
- RECESSED LED DOWN LIGHT
- WALL MOUNT LIGHT
- LED STRIP LIGHT
- SWITCH
- DIMMER SWITCH
- MS MOTION-SENSOR SWITCH
- VS VACANCY SWITCH
- F FAN SWITCH/HUMIDITY SENSOR
- SWITCH LEG
- WHOLE HOUSE VENTILATION FAN PER ASHRAE 62.2, DUCT TO EXTERIOR PER MANUFACTURER'S SPECIFICATIONS
- 3 3 WAY SWITCH

NOTE: SEE ELECTRICAL NOTES ON SHEET G1.0

REFLECTED CEILING PLAN NOTES

1. LIGHT FIXTURE DIMENSIONS ARE TO CENTERLINE OF FIXTURE AND FACE OF FINISH AT WALL.
2. PROVIDED TOTALS OF LIGHT FIXTURES ARE FOR REFERENCE ONLY. ACTUAL TOTALS TO BE VERIFIED BY CONTRACTOR.
3. SMOKE DETECTORS SHALL BE LISTED FOR USE WITHIN 10 FEET OF A COOKING APPLIANCE.

REFLECTED CEILING PLAN LEGEND

- GYP. BD. CLG., PTD.
- 8' - 0" FRAMED CEILING HEIGHT A.F.F.
- (S) **PHOTOELECTRIC** CEILING MOUNTED SMOKE DETECTOR. HARDWIRED WITH BATTERY BACKUP. OWNER TO APPROVE SELECTION PRIOR TO PURCHASE. ALL SMOKE DETECTORS SHALL COMPLY WITH 2022 C.R.C. SECTION R314 AND SHALL BE 120V STATE FIRE MARSHAL APPROVED DEVICES INSTALLED IN ACCORDANCE WITH THEIR LISTING.
- (C) CARBON MONOXIDE DETECTOR COMBINATION SMOKE DETECTOR AND CARBON MONOXIDE DETECTOR TO BE CEILING MOUNTED. HARDWIRED WITH BATTERY BACKUP. OWNER TO APPROVE SELECTION PRIOR TO PURCHASE. CARBON MONOXIDE ALARMS COMBINED WITH SMOKE ALARMS SHALL COMPLY WITH 2022 C.R.C. SECTION 315, ALL APPLICABLE STANDARDS, AND REQUIREMENTS FOR LISTINGS AND APPROVAL BY THE OFFICE OF THE STATE FIRE MARSHAL.

LIGHTING NOTES

1. ALL PERMANENTLY INSTALLED LUMINAIRES SHALL BE CLASSIFIED HIGH LUMINOUS EFFICACY, AS SPECIFIED IN CEC 150.0(K). RECESSED DOWLIGHT LUMINAIRES MUST CONTAIN LIGHT SOURCES THAT ARE JA8-CERTIFIED, MUST NOT CONTAIN SCREW-BASED LAMPS AND MUST NOT CONTAIN LIGHT SOURCES THAT ARE FOR USE IN ENCLOSED LUMINAIRES OR NOT FOR USE IN RECESSED LUMINAIRES.
2. FOR ENCLOSED LUMINAIRES AND RECESSED LUMINAIRES OTHER THAN CEILING-RECESSED DOWNLIGHTS, THE INSTALLED LIGHT SOURCES MUST BE JA8-COMPLIANT AND MEET THE ELEVATED TEMPERATURES TESTING REQUIREMENT.
3. THE FOLLOWING SPACES ARE REQUIRED TO HAVE AT LEAST ONE INSTALLED LUMINAIRE IN THE SPACE CONTROLLED BY AN OCCUPANCY OR VACANCY SENSORY PROVIDING AUTOMATIC-OFF FUNCTIONALITY:
   - A. BATHROOMS
   - B. GARAGES
   - C. LAUNDRY ROOMS
   - D. UTILITY ROOMS
   - E. WALK-IN CLOSETS
4. THE NUMBER OF BLANK ELECTRICAL BOXES MORE THAN 5 FEET ABOVE THE FINISHED FLOOR SHALL NOT BE GREATER THAN THE NUMBER OF BEDROOMS. THESE BOXES SHALL BE CONTROLLED BY A DIMMER, VACANCY SENSOR, OR FAN SPEED CONTROL. CEC 150.0(K)8.
5. EXHAUST FANS (EXCLUDING KITCHEN EXHAUST HOOD) SHALL BE SWITCHED SEPARATE FROM LIGHTING (OR UTILIZE A DEVICE WHERE LIGHTING CAN BE TURNED OFF WHILE FAN IS RUNNING).
6. PROVIDE SEPARATE SWITCHING FOR ANY UNDER CABINET LIGHTING FROM OTHER LIGHTING SYSTEMS CEC150.0(K)2L.
7. ALL RECESSED DOWNLIGHT LUMINARIES IN CEILINGS SHALL MEET ALL OF THE FOLLOWING REQUIREMENTS:
   - A. BE LISTED, AS DEFINED ON SECTION 100.1, FOR ZERO CLEARANCE INSULATION CONTACT(IC) BY UNDERWRITERS LABORATORY OR OTHER NATIONALLY RECOGNIZED TESTING/RATING LABORATORY; AND
   - B. HAVE A LABEL THAT CERTIFIES THE LUMINAIRE IS AIRTIGHT WITH AIR LEAKAGE LESS THAN 2.0 CFM AT 75 PASCALS WHEN TESTED IN ACCORDANCE WITH ASTM E283. ANY EXHAUST FAN HOUSING SHALL NOT BE REQUIRED TO BE CERTIFIED AIRTIGHT; AND
   - C. BE SEALED WITH A GASKET OR CAULK BETWEEN THE LUMINAIRE HOUSING AND CEILING, AND SHALL HAVE ALL AIR LEAK PATHS BETWEEN CONDITIONED AND UNCONDITIONED SPACES SEALED WITH A GASKET OUR CAULK; AND
   - D. FOR LUMINAIRES WITH HARDWIRED BALLASTS OR DRIVERS, ALLOW BALLAST OR DRIVER MAINTENANCE AND REPLACEMENT TO BE READILY ACCESSIBLE TO BUILDING OCCUPANTS FROM BELOW CEILING WITHOUT REQUIRING THE CUTTING OF HOLES IN THE CEILING; AND
   - E. SHALL NOT CONTAIN SCREW-BASED SOCKETS; AND
   - F. SHALL CONTAIN LIGHT SOURCES THAT COMPLY WITH REFERENCES JOINT APPENDIX JA8, INCLUDING THE ELEVATED TEMPERATURE REQUIREMENTS, AND THAT ARE MARKED "JAS-2022-E" AS SPECIFIED IN REFERENCE JOINT APPENDIX JA8.
8. ALL OUTDOOR LIGHTING SHALL BE HIGH EFFICACY WITH MANUAL ON/OFF SWITCH AND ONE OF THE FOLLOWING IN ACCORDANCE WITH CEC 150.0(K)3
   - A. PHOTOCONTROL AND MOTION SENSOR
   - B. PHOTOCONTROL AND AUTO TIME SWITCH CONTROL
   - C. ASTRONOMICAL TIME SWITCH CONTROL
   - D. ENERGY MANAGEMENT CONTROL SYSTEMS
9. ALL LIGHT FIXTURES LOCATED IN TUB OR SHOWER ENCLOSURE SHALL BE LABELLED "SUITABLE FOR WET LOCATIONS" CEC 410.10A
10. ALL EXTERIOR LIGHTING TO COMPLY WITH THE DARK SKY REGULATION; FIXTURES MUST HAVE A FULLY SHIELDED TOP DIRECTING THE LIGHT DOWNWARD AND A COLOR TEMPERATURE OF 3000K OR LESS.
11. STORAGE OR EQUIPMENT SPACES. FOR ATTICS, UNDERFLOOR SPACES, UTILITY ROOMS, AND BASEMENTS, AT LEAST ONE LIGHTING OUTLET CONTAINING A SWITCH OR CONTROLLED BY A WALL SWITCH SHALL BE INSTALLED WHERE THESE SPACES ARE USED FOR STORAGE OR CONTAIN EQUIPMENT REQUIRING SERVICING OR REPLACEMENT. AT LEAST ONE POINT OF CONTROL SHALL BE AT THE USUAL POINT OF ENTRY TO THESE SPACES. THE LIGHTING OUTLET SHALL BE PROVIDED AT OR NEAR THE EQUIPMENT REQUIRING SERVICING OR REPLACEMENT. CEC 210.70(A)(3)

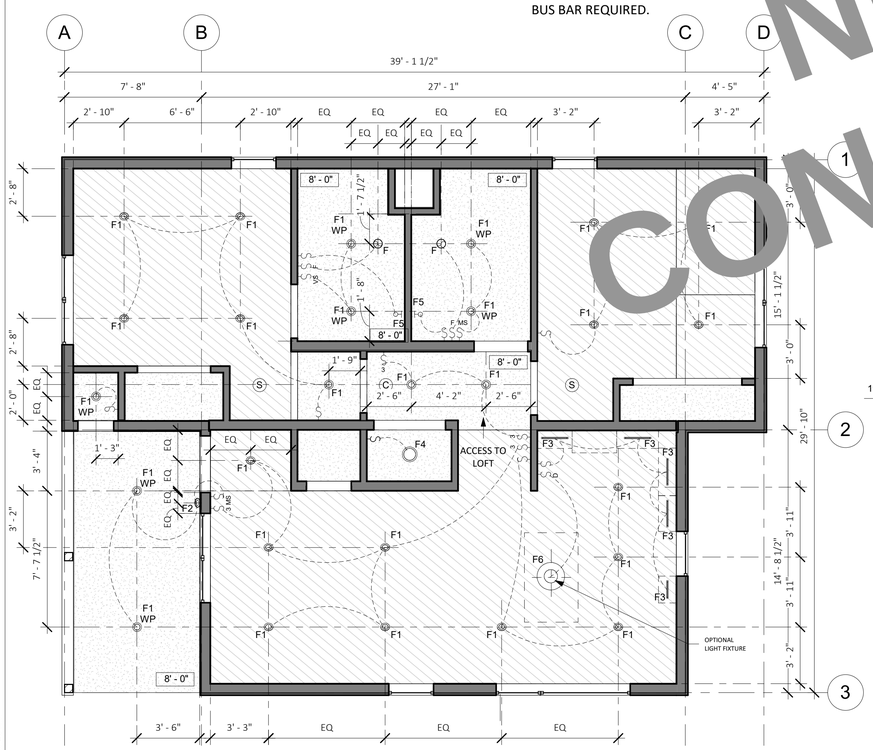

3 RCP - TWO BEDROOM
1/4" = 1'-0"

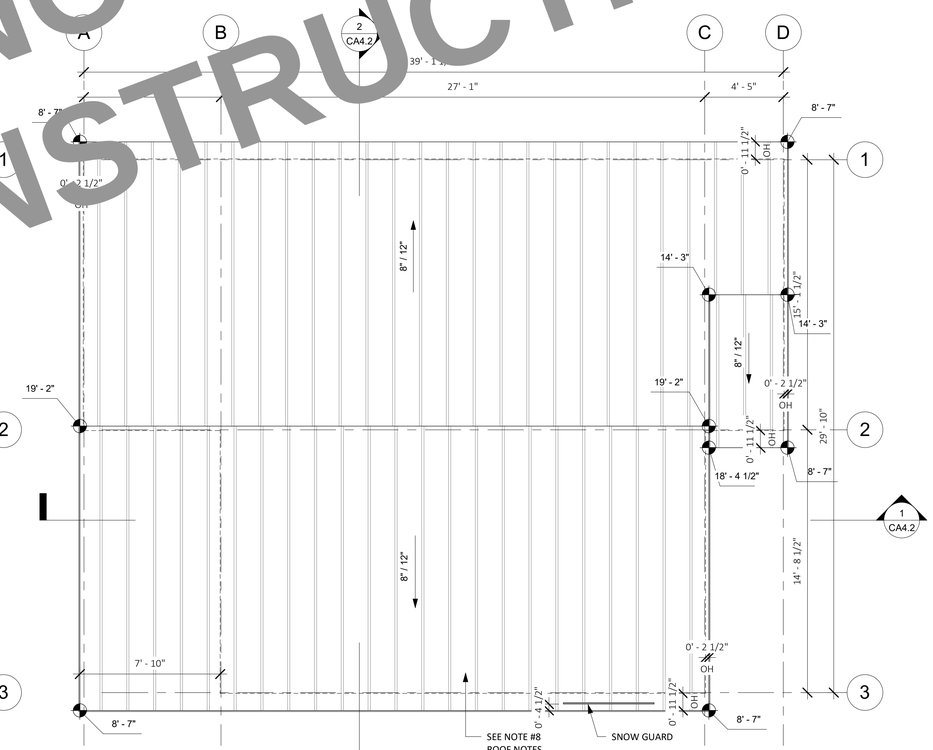

1 ROOF PLAN - MEADOW
1/4" = 1'-0"

NOT FOR CONSTRUCTION

12/14/2023 10:30:19 AM

workbench

189 WALNUT AVENUE
SANTA CRUZ, CA 95060
WORKBENCHBUILT.COM
P: 831.227.2217

BY USING THESE PRE-DESIGNED ADU PLANS, THE RECIPIENT IS ACKNOWLEDGING ACCEPTANCE OF THE FOLLOWING CONDITIONS.

1. THE USE OF THIS INFORMATION IS RESTRICTED TO THE ORIGINAL PROJECT FOR WHICH IT WAS PREPARED (THE PRE-DESIGNED ADU PLANS FOR THE COUNTY OF PLUMAS CALIFORNIA). USE OF THESE PLANS DOES NOT ELIMINATE OR REDUCE THE RECIPIENT'S RESPONSIBILITY TO VERIFY ANY AND ALL INFORMATION RELEVANT TO THE RECIPIENT'S WORK AND RESPONSIBILITY ON THIS PROJECT. WORKBENCH AND/OR THE COUNTY OF PLUMAS SHALL NOT BE RESPONSIBLE FOR TRANSLATION ERRORS.

2. THE RECIPIENT RECOGNIZES AND ACKNOWLEDGES THAT THE USE OF THIS INFORMATION WILL BE AT THEIR SOLE RISK AND WITHOUT ANY LIABILITY OR LEGAL EXPOSURE TO WORKBENCH OR THE COUNTY OF PLUMAS. NO WARRANTIES OF ANY NATURE, WHETHER EXPRESS OR IMPLIED, SHALL ATTACH TO THESE DOCUMENTS AND THE INFORMATION CONTAINED THEREON. ANY USE, REUSE, OR ALTERATION OF THESE DOCUMENTS BY THE RECIPIENT OR BY OTHERS WILL BE AT THE RECIPIENT'S RISK AND FULL LEGAL RESPONSIBILITY. FURTHERMORE, THE RECIPIENT WILL, TO THE FULLEST EXTENT PERMITTED BY LAW, INDEMNIFY AND HOLD WORKBENCH AND THE COUNTY OF PLUMAS HARMLESS FROM ANY AND ALL CLAIMS, SUITS, LIABILITY, DEMANDS, JUDGEMENTS, OR COSTS ARISING OUT OF OR RESULTING THERE FROM ON ACCOUNT OF ANY INJURY, DEATH, DAMAGE OR LOSS TO PERSONS OR PROPERTY.

3 THE DESIGNS REPRESENTED BY THESE PLANS ARE COPYRIGHTED AND SUBJECT TO COPYRIGHT PROTECTION. IF THE RECIPIENT DOES NOT AGREE WITH THE ABOVE CONDITIONS, THE RECIPIENT SHOULD NOT PROCEED BEYOND THIS DISCLAIMER.

PLUMAS COUNTY PRE-DESIGNED ADU

PLAN C- TWO BEDROOM ADU

990 GSF

NOT FOR CONSTRUCTION

C - MEADOW - ROOF PLAN, ELECTRICAL & RCP

A4.1

SCALE : AS NOTED

KITCHEN KEYNOTES

TAG	DESCRIPTION
CABINET WIDTH	
B16	16" BASE CABINET
BD18	18" BASE CABINET - DRAWERS
BD20	20" BASE CABINET - DRAWERS
BD23	23" BASE CABINET - DRAWERS
U18.	24" UPPER CABINET
U23	23" UPPER CABINET
U24	24" UPPER CABINET
U28	28" UPPER CABINET
U32	27" UPPER CABINET
UM30	30" UPPER CABINET - ABOVE MICROWAVE

APPLIANCES

11 11 00.A1	24" CLOTHES DRYER (HOMEOWNER PROVIDED)
11 11 00.A2	24" CLOTHES WASHER (HOMEOWNER PROVIDED)
11 11 00.A4	24" DISHWASHER
11 11 00.A8	24" STACKED CLOTHES DRYER
11 11 00.A14	30" ELECTRIC RANGE
11 11 00.A15	30" MICROWAVE / HOOD VENT COMBO UNIT
11 11 00.A9	30" REFRIGERATOR

PLUMBING

22 40 00.A4	30" KITCHEN SINK/FAUCET

NOT FOR CONSTRUCTION

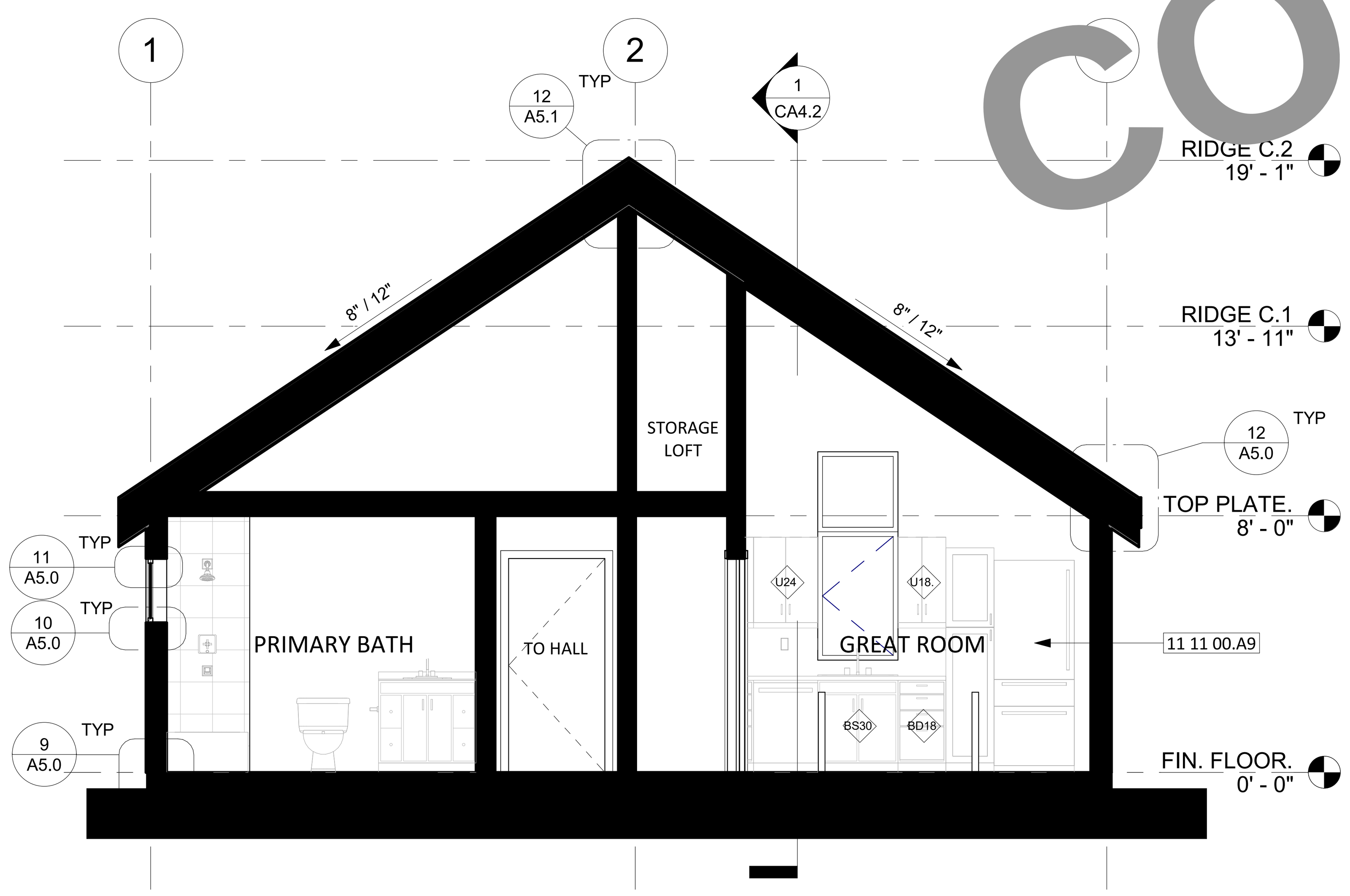

2 CROSS SECTION - MEADOW
1/4" = 1'-0"

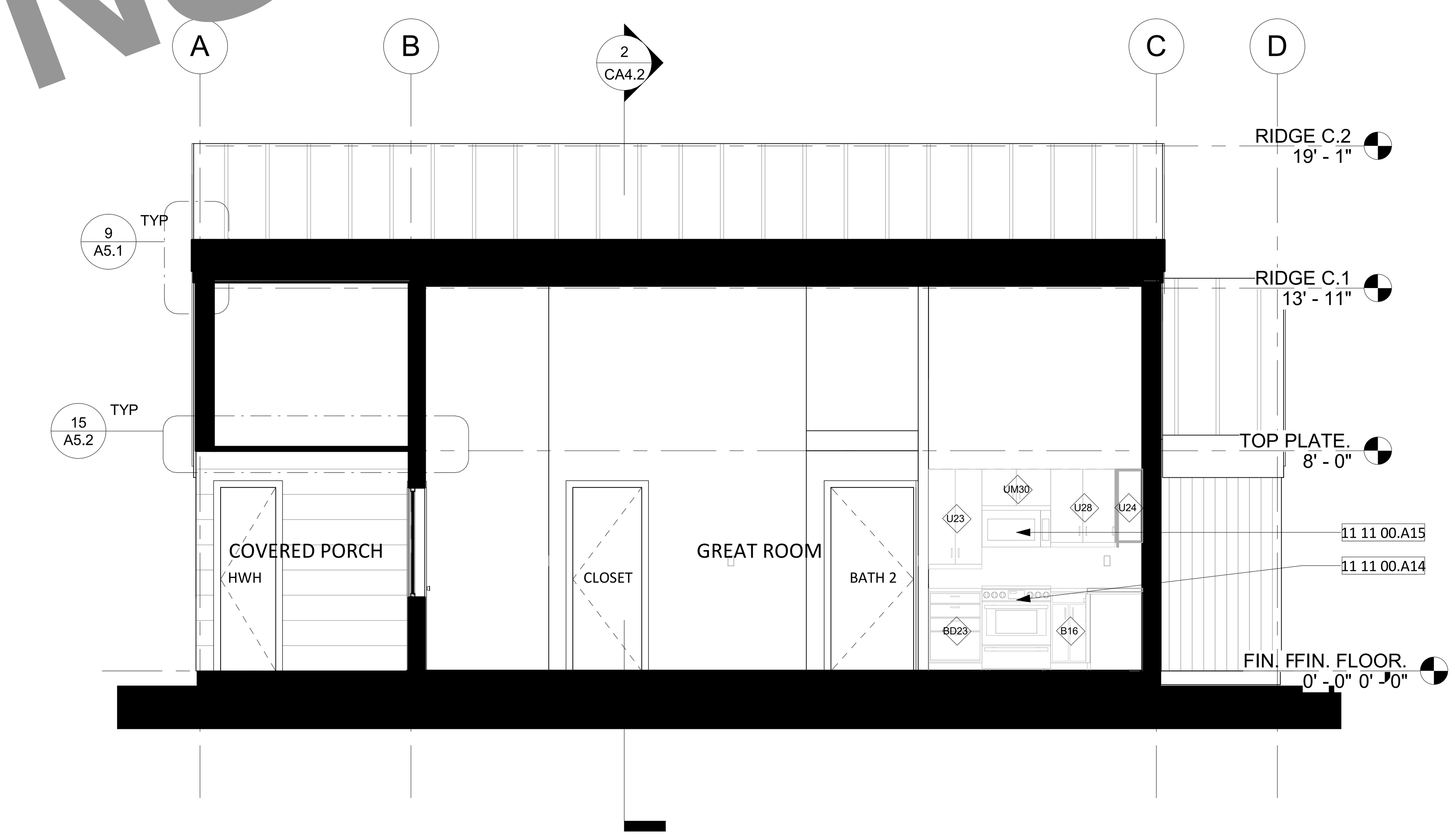

1 LONGITUDINAL SECTION 1 - LAKESIDE
1/4" = 1'-0"

12/14/2023 10:30:22 AM

workbench
189 WALNUT AVENUE
SANTA CRUZ, CA 95060
WORKBENCHBUILT.COM
P: 831.227.2217

BY USING THESE PRE-DESIGNED ADU PLANS, THE RECIPIENT IS ACKNOWLEDGING ACCEPTANCE OF THE FOLLOWING CONDITIONS.

1. THE USE OF THIS INFORMATION IS RESTRICTED TO THE ORIGINAL PROJECT FOR WHICH IT WAS PREPARED (THE PRE-DESIGNED ADU PLANS FOR THE COUNTY OF PLUMAS CALIFORNIA). USE OF THESE PLANS DOES NOT ELIMINATE OR REDUCE THE RECIPIENT'S RESPONSIBILITY TO VERIFY ANY AND ALL INFORMATION RELEVANT TO THE RECIPIENT'S WORK AND RESPONSIBILITY ON THIS PROJECT. WORKBENCH AND/OR THE COUNTY OF PLUMAS SHALL NOT BE RESPONSIBLE FOR TRANSLATION ERRORS.

2. THE RECIPIENT RECOGNIZES AND ACKNOWLEDGES THAT THE USE OF THIS INFORMATION WILL BE AT THEIR SOLE RISK AND WITHOUT ANY LIABILITY OR LEGAL EXPOSURE TO WORKBENCH OR THE COUNTY OF PLUMAS. NO WARRANTIES OF ANY NATURE, WHETHER EXPRESS OR IMPLIED, SHALL ATTACH TO THESE DOCUMENTS AND THE INFORMATION CONTAINED THEREON. ANY USE, REUSE, OR ALTERATION OF THESE DOCUMENTS BY THE RECIPIENT OR BY OTHERS WILL BE AT THE RECIPIENT'S RISK AND FULL LEGAL RESPONSIBILITY. FURTHERMORE, THE RECIPIENT WILL, TO THE FULLEST EXTENT PERMITTED BY LAW, INDEMNIFY AND HOLD WORKBENCH AND THE COUNTY OF PLUMAS HARMLESS FROM ANY AND ALL CLAIMS, SUITS, LIABILITY, DEMANDS, JUDGEMENTS, OR COSTS ARISING OUT OF OR RESULTING THERE FROM ON ACCOUNT OF ANY INJURY, DEATH, DAMAGE OR LOSS TO PERSONS OR PROPERTY.

3 THE DESIGNS REPRESENTED BY THESE PLANS ARE COPYRIGHTED AND SUBJECT TO COPYRIGHT PROTECTION. IF THE RECIPIENT DOES NOT AGREE WITH THE ABOVE CONDITIONS, THE RECIPIENT SHOULD NOT PROCEED BEYOND THIS DISCLAIMER.

PLUMAS COUNTY PRE-DESIGNED ADU

PLAN C- TWO BEDROOM ADU
990 GSF

NOT FOR CONSTRUCTION

C - MEADOW - SECTIONS

A4.2

SCALE : AS NOTED

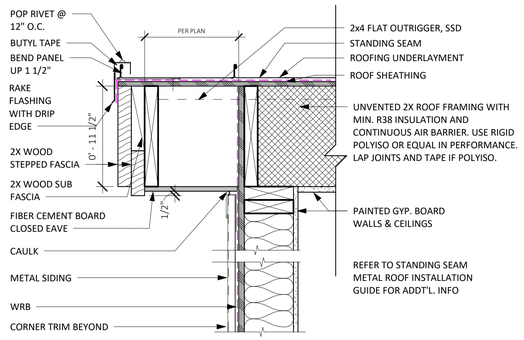

12 BASIC RAKE @ STANDING SEAM
1 1/2" = 1'-0"

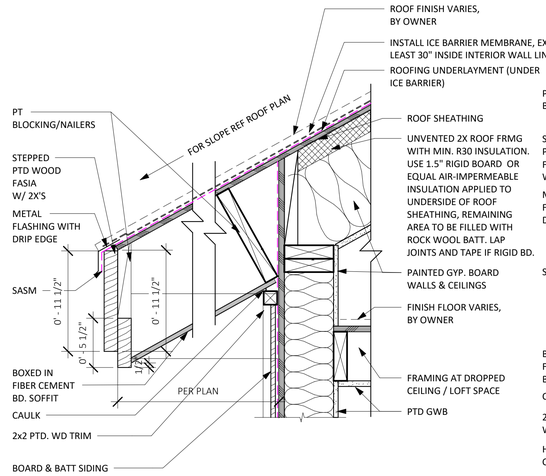

8 EAVE AT BOARD & BATT NO GUTTER
1 1/2" = 1'-0"

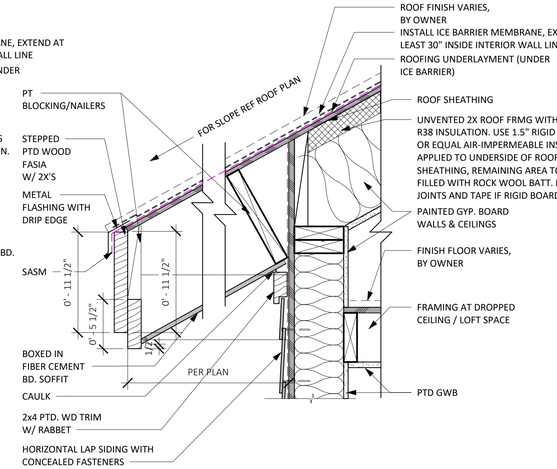

4 EAVE AT LAP SIDING NO GUTTER
1 1/2" = 1'-0"

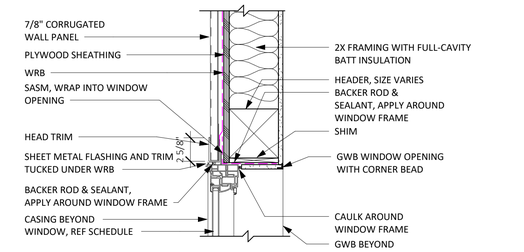

11 WINDOW HEAD AT METAL SIDING
1 1/2" = 1'-0"

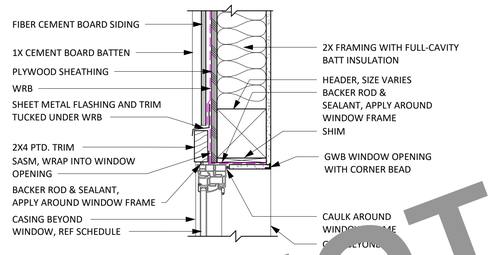

7 WINDOW HEAD AT BOARD AND BATTEN
1 1/2" = 1'-0"

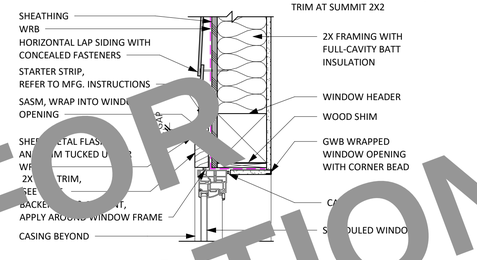

3 WINDOW HEAD AT LAP SIDING
1 1/2" = 1'-0"

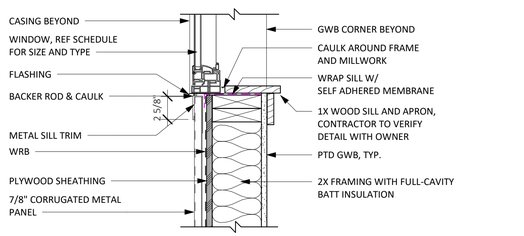

10 WINDOW SILL AT METAL SIDING
1 1/2" = 1'-0"

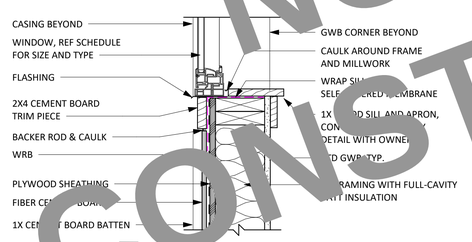

6 WINDOW SILL AT BOARD & BATTEN
1 1/2" = 1'-0"

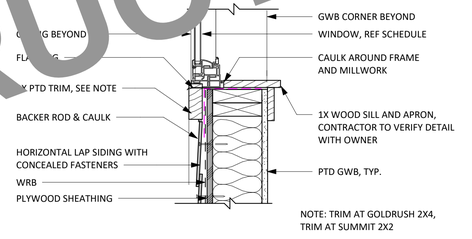

2 WINDOW SILL AT LAP SIDING
1 1/2" = 1'-0"

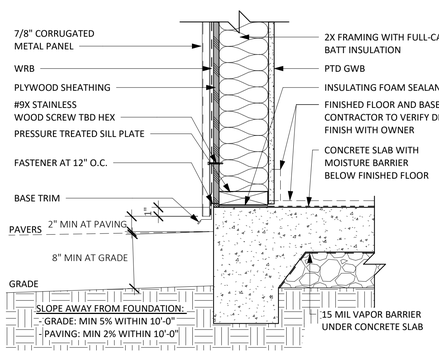

9 SLAB EDGE AT METAL SIDING
1 1/2" = 1'-0"

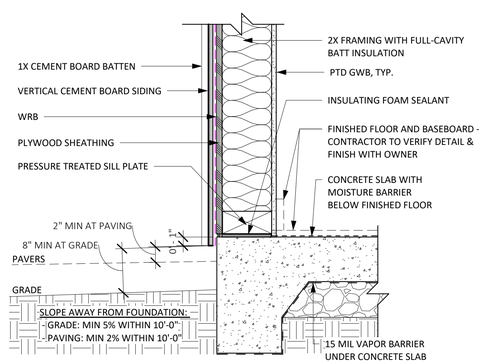

5 SLAB AT BOARD & BATTEN SIDING
1 1/2" = 1'-0"

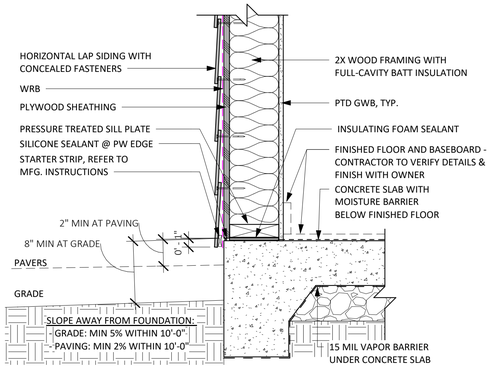

1 SLAB EDGE AT LAP SIDING
1 1/2" = 1'-0"

E3 CORRUGATED METAL SIDING

E2 BOARD AND BATTEN SIDING - FIBER CEMENT

E1 HORIZONTAL LAP SIDING - FIBER CEMENT

DETAIL GENERAL NOTES

1. BASIS OF OPAQUE WALL DESIGN IS HARDIE PANEL SIDING. FAILURE TO FOLLOW JAMES HARDIE WRITTEN INSTALLATION INSTRUCTION AND COMPLY WITH APPLICABLE BUILDING CODES MAY VIOLATE LOCAL LAWS, AFFECT BUILDING ENVELOPE PERFORMANCE, AND MAY AFFECT WARRANTY COVERAGE.
2. BASIS OF WINDOW DESIGN IS ANDERSEN 100 SERIES COMPOSITE WINDOWS, COMPLYING WITH THE PERFORMANCE REQUIREMENTS INDICATED BY TITLE 24/MECHANICAL SHEETS AND TESTED ACCORDING TO NAFS.
3. PROTECTION OF WOOD AND WOOD-BASED PRODUCTS FROM DECAY SHALL BE PROVIDED BY THE USE OF NATURALLY DURABLE WOOD OR WOOD THAT IS AWPA U1 LISTED PRESERVATIVE-TREATED FOR WOOD SIDING, SHEATHING, AND WALL FRAMING ON THE EXTERIOR OF A BUILDING HAVING A CLEARANCE OF LESS THAN 6-INCHES FROM THE GROUND OR LESS THAN 2-INCHES MEASURED VERTICALLY FROM CONCRETE STEPS, PORCH SLABS, PATIO SLABS AND SIMILAR HORIZONTAL SURFACES EXPOSED TO WEATHER [CRC R317.1.5]
4. REFERENCE STRUCTURAL DETAILS, DRAWINGS AND CALCULATIONS FOR ALL STRUCTURAL RELATED MEMBER SIZES, CONNECTION DETAILS, REBAR REQUIREMENTS AND SPACING, HARDWARE AND SPECIFICATIONS.
5. REFER TO TITLE 24/MECHANICAL SHEETS FOR MINIMUM INSULATION VALUES.

WUI NOTES

THE WILDLAND–URBAN INTERFACE (WUI) IS A ZONE OF TRANSITION BETWEEN WILDERNESS (UNOCCUPIED LAND) AND LAND DEVELOPED BY HUMAN ACTIVITY – AN AREA WHERE A BUILT ENVIRONMENT MEETS OR INTERMINGLES WITH A NATURAL ENVIRONMENT. HOMEOWNERS SHOULD VERIFY WITH THEIR JURISDICTION'S BUILDING DEPARTMENT TO SEE IF THEIR PROPERTY IS LOCATED WITHIN A WUI ZONE. THE FOLLOWING ARE MINIMUM REQUIREMENTS PER THE MOST RECENT VERSION OF THE CALIFORNIA BUILDING CODE, CHAPTER 7A, AND CALIFORNIA RESIDENTIAL CODE.

ROOFS AND ROOF EDGES. CBC 705A / CRC R337.5
ROOFS SHALL COMPLY WITH THE REQUIREMENTS OF THE CBC 705A AND SECTIONS CRC337 AND CRC902. NONCOMBUSTIBLE (TILE OR METAL) OR CLASS 'A' ROOFING (CLASS A ASPHALT SHINGLES) ASSEMBLY IS REQUIRED IN SRA - VERY HIGH FIRE HAZARD SEVERITY ZONES. WHERE THE ROOF PROFILE ALLOWS A SPACE BETWEEN THE ROOF COVERING AND THE ROOF DECKING, THE SPACES SHALL: BE CONSTRUCTED TO PREVENT THE INTRUSION OF FLAMES AND EMBERS; BE FIRESTOPPED WITH APPROVED MATERIALS; OR HAVE ONE LAYER OF NO. 72 CAP SHEET INSTALLED OVER THE COMBUSTIBLE DECKING.
WHERE PROVIDED, VALLEY FLASHING MUST BE NOT LESS THAN 26 GAUGE GALVANIZED SHEET METAL OVER A 36-INCH WIDE NO. 72 ASTM CAP SHEET.

EXTERIOR WALLS/SIDING. CBC 707A.3 /CRC R337.7.3
NONCOMBUSTIBLE, LISTED IGNITION-RESISTANT MATERIALS, HEAVY TIMBER, 5/8" TYPE X GYPSUM SHEATHING BEHIND EXTERIOR COVERING, EXTERIOR PORTION OF 1-HR ASSEMBLY OR LOG WALL CONSTRUCTION IS ALLOWED. THE OSFM WEBSITE LISTS MANY TYPES OF EXTERIOR WALL COVERINGS THAT ARE APPROVED.

EAVES AND PORCH CEILINGS CBC 707A.4, A.6 / CRC 337.7.4. R337.7.6
THE EXPOSED ROOF DECK UNDER UNENCLOSED EAVES AND UNDERSIDE OF PORCH CEILINGS SHALL BE NONCOMBUSTIBLE, LISTED IGNITION-RESISTANT MATERIALS, OR 5/8" TYPE X GYPSUM SHEATHING BEHIND EXTERIOR COVERING. SOLID WOOD RAFTER TAILS ON THE EXPOSED UNDERSIDE OF ROOF EAVES HAVING A MINIMUM 2" NOMINAL DIMENSION MAY BE UNPROTECTED.

VENTS. CBC 706A / CRC R337.6
VENTS SHALL NOT BE INSTALLED ON THE UNDERSIDE OF EAVES UNLESS THE VENTS ARE WILDLAND FLAME AND EMBER RESISTANT (WUI) VENTS APPROVED AND LISTED BY THE CALIFORNIA STATE FIRE MARSHAL, OR WUI VENTS LISTED TO ASTM E2886. AN EXCEPTION ALLOWS VENTS TO BE INSTALLED ON THE UNDERSIDE OF EAVES FOR VENTILATED ATTIC SPACES PROTECTED WITH FIRE SPRINKLERS, AND VENTS ARE LOCATED MORE THAN 12 FEET FROM THE GROUND OR WALKING SURFACE OF A DECK, PORCH, PATIO OR SIMILAR SURFACE. VENTILATION OPENINGS FOR ENCLOSED ATTICS, ENCLOSED EAVE SOFFIT SPACES, ENCLOSED RAFTER SPACES FORMED WHERE CEILINGS ARE APPLIED DIRECTLY TO THE UNDERSIDE OF ROOF RAFTERS, AND UNDERFLOOR VENTILATION OPENINGS SHALL BE FULLY COVERED WITH WILDLAND FLAME AND EMBER RESISTANT (WUI) VENTS APPROVED AND LISTED BY THE CALIFORNIA STATE FIRE MARSHAL, OR WUI VENTS LISTED TO ASTM E2886. AN EXCEPTION ALLOWS VENT 1/8" OPENINGS ON TOP OF SLOPED ROOFS THAT ARE CORROSION-RESISTANT, NONCOMBUSTIBLE WIRE MESH OR EQUIVALENT.

WINDOWS AND EXTERIOR DOORS. CBC 708A / CRC R337.8
WINDOWS MUST BE INSULATED GLASS WITH A MINIMUM OF 1 TEMPERED PANE OR 20 MIN RATED OR GLASS BLOCK. EXTERIOR DOORS MUST BE NONCOMBUSTIBLE OR IGNITION RESISTANT MATERIAL OR 1 3/8" SOLID CORE, OR HAVE A 20 MIN FIRE-RESISTANCE RATING.

EXTERIOR DECKING AND STAIRS. CBC 709A / CRC R337.9
WALKING SURFACES OF DECKS, PORCHES. BALCONIES AND STAIRS WITHIN 10 FEET OF THE BUILDING MUST BE CONSTRUCTED OF NONCOMBUSTIBLE, FIRE-RETARDANT TREATED OR HEAVY-TIMBER CONSTRUCTION. ALTERNATE MATERIALS CAN BE USED OF THEY ARE IGNITION-RESISTANT AND PASS PERFORMANCE REQUIREMENTS SPECIFIED BY THE STATE FIRE MARSHAL.

UNDERFLOOR AND APPENDAGES. CBC 707A.8 / CRC R337.7.8
EXPOSED UNDERFLOORS, UNDERSIDE OF CANTILEVERED AND OVERHANGING DECKS, BALCONIES AND SIMILAR APPENDAGES SHALL BE NON-COMBUSTIBLE, IGNITION RESISTANT, 5/8" TYPE X GYPSUM SHEATHING BEHIND EXTERIOR COVERING, EXTERIOR PORTION OF 1-HR ASSEMBLY, MEET PERFORMANCE CRITERIA SFM STANDARD 12-7A-3 OR BE ENCLOSED TO GRADE.

PERFORMANCE NOTES

ENSURE THAT MANDATORY MINIMUM REQUIREMENTS ARE MET, PER BUILDING ENERGY EFFICIENCY STANDARDS FOR RESIDENTIAL BUILDINGS / TITLE 24, PART 6, INCLUDING BUT NOT LIMITED TO:
1. SECTION 110.6: MANDATORY REQUIREMENTS FOR FENESTRATION PRODUCTS AND EXTERIOR DOORS, I.E. CERTIFICATION OF AIR LEAKAGE, U-FACTOR, SHGC, VISIBLE LIGHT TRANSMITTANCE, ETC.
2. SECTION 110.7: LIMITING AIR LEAKAGE, I.E. ALL JOINTS, PENETRATIONS AND OTHER OPENINGS IN THE BUILDING ENVELOPE THAT ARE POTENTIAL SOURCES OF AIR LEAKAGE SHALL BE CAULKED, GASKETED, WEATHER STRIPPED, OR OTHERWISE SEALED TO LIMIT INFILTRATION OR EXFILTRATION.
3. SECTION 110.8: MANDATORY REQUIREMENTS FOR INSULATION, ROOFING PRODUCTS AND RADIANT BARRIERS, INCLUDING REQUIREMENTS FOR FLAME SPREAD RATING OF INSULATION AND APPLICABLE SLAB INSULATION REQUIREMENTS.
4. SECTION 150.0: MANDATORY FEATURES AND DEVICES AND SECTION 150.1 – PERFORMANCE AND PRESCRIPTIVE COMPLIANCE APPROACHES FOR LOW-RISE RESIDENTIAL BUILDINGS (AS APPLICABLE).

FIRE RATING NOTES

1. WITHIN 3-5 FT OF PROPERTY LINE, THE WALL ASSEMBLY SHALL BE 1-HOUR RATED WITH THE AREA OF OPENINGS LIMITED TO 25% OF THE WALL AREA.

WB STANDARD:
1-HR RATED WALL PER CBC TABLE 721.1(2), ITEM #15-1.12[g]

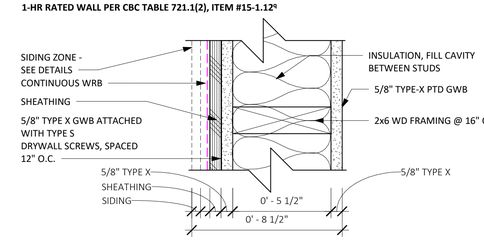

workbench
189 WALNUT AVENUE
SANTA CRUZ, CA 95060
WORKBENCHBUILT.COM
P: 831.227.2217

BY USING THESE PRE-DESIGNED ADU PLANS, THE RECIPIENT IS ACKNOWLEDGING ACCEPTANCE OF THE FOLLOWING CONDITIONS.

1. THE USE OF THIS INFORMATION IS RESTRICTED TO THE ORIGINAL PROJECT FOR WHICH IT WAS PREPARED (THE PRE-DESIGNED ADU PLANS FOR THE COUNTY OF PLUMAS CALIFORNIA). USE OF THESE PLANS DOES NOT ELIMINATE OR REDUCE THE RECIPIENT'S RESPONSIBILITY TO VERIFY ANY AND ALL INFORMATION RELEVANT TO THE RECIPIENT'S WORK AND RESPONSIBILITY ON THIS PROJECT. WORKBENCH AND/OR THE COUNTY OF PLUMAS SHALL NOT BE RESPONSIBLE FOR TRANSLATION ERRORS.

2. THE RECIPIENT RECOGNIZES AND ACKNOWLEDGES THAT THE USE OF THIS INFORMATION WILL BE AT THEIR SOLE RISK AND WITHOUT ANY LIABILITY OR LEGAL EXPOSURE TO WORKBENCH OR THE COUNTY OF PLUMAS. NO WARRANTIES OF ANY NATURE, WHETHER EXPRESS OR IMPLIED, SHALL ATTACH TO THESE DOCUMENTS AND THE INFORMATION CONTAINED THEREON. ANY USE, REUSE, OR ALTERATION OF THESE DOCUMENTS BY THE RECIPIENT OR BY OTHERS WILL BE AT THE RECIPIENT'S RISK AND FULL LEGAL RESPONSIBILITY. FURTHERMORE, THE RECIPIENT WILL, TO THE FULLEST EXTENT PERMITTED BY LAW, INDEMNIFY AND HOLD WORKBENCH AND THE COUNTY OF PLUMAS HARMLESS FROM ANY AND ALL CLAIMS, SUITS, LIABILITY, DEMANDS, JUDGEMENTS, OR COSTS ARISING OUT OF OR RESULTING THERE FROM ON ACCOUNT OF ANY INJURY, DEATH, DAMAGE OR LOSS TO PERSONS OR PROPERTY.

3 THE DESIGNS REPRESENTED BY THESE PLANS ARE COPYRIGHTED AND SUBJECT TO COPYRIGHT PROTECTION. IF THE RECIPIENT DOES NOT AGREE WITH THE ABOVE CONDITIONS, THE RECIPIENT SHOULD NOT PROCEED BEYOND THIS DISCLAIMER.

PLUMAS COUNTY
PRE-DESIGNED ADU
PLAN A- STARTER ONE BEDROOM ADU
705 GSF

NOT FOR CONSTRUCTION

EXTERIOR WALL ASSEMBLY DETAILS

A5.0

SCALE : AS NOTED

12/14/2023 10:29:43 AM

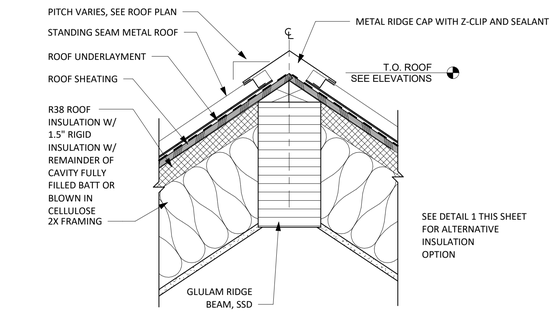

12 UNVENTED RIDGE AT STANDING SEAM
1 1/2" = 1'-0"

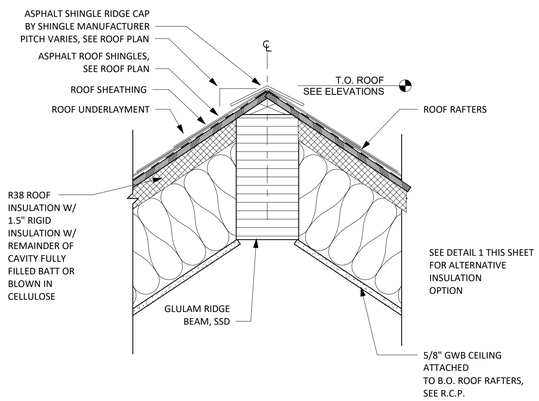

11 UNVENTED RIDGE AT ASPHALT SHINGLE
1 1/2" = 1'-0"

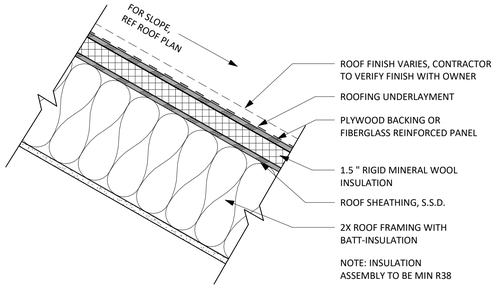

10 EXTERIOR INSULATION AT ROOF-OPTIONAL
1 1/2" = 1'-0"

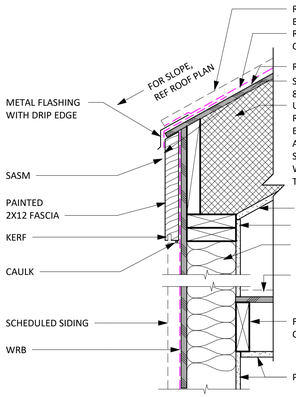

9 EAVE WITH ZERO OVERHANG
1 1/2" = 1'-0"

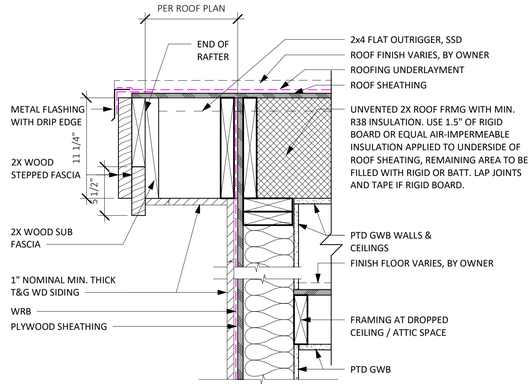

8 EAVE WITH T&G SIDING - WUI COMPLIANT
1 1/2" = 1'-0"

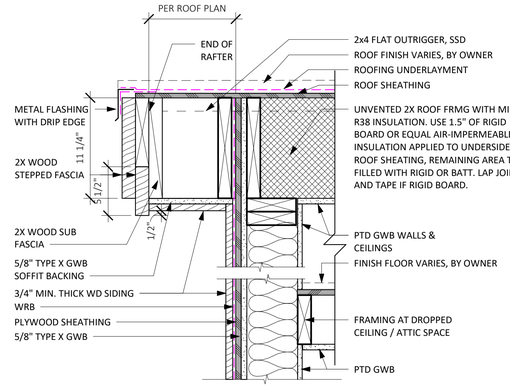

4 EAVE WITH WOOD SIDING - WUI COMPLIANT
1 1/2" = 1'-0"

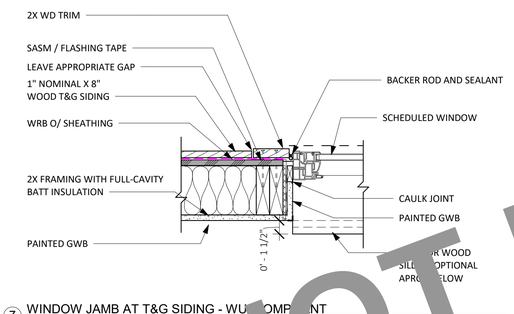

7 WINDOW JAMB AT T&G SIDING - WUI COMPLIANT
1 1/2" = 1'-0"

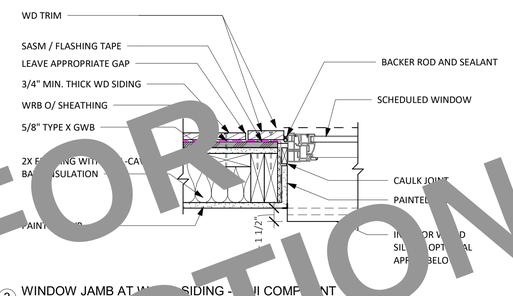

3 WINDOW JAMB AT WOOD SIDING - WUI COMPLIANT
1 1/2" = 1'-0"

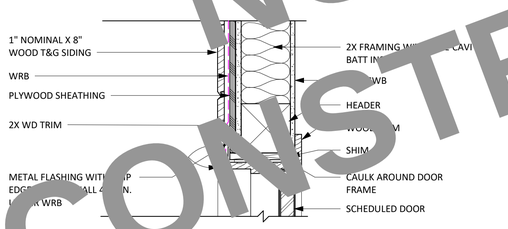

6 DOOR HEAD AT T&G SIDING - WUI COMPLIANT
1 1/2" = 1'-0"

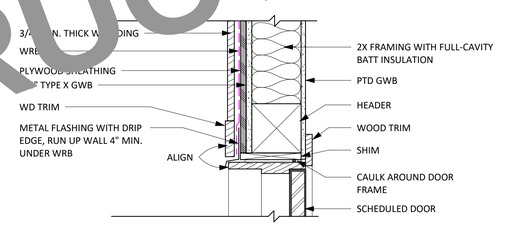

2 DOOR HEAD AT WOOD SIDING - WUI COMPLIANT
1 1/2" = 1'-0"

NOTE: WOOD TONGUE AND GROOVE SIDING MATERIAL SPECIFICATION MUST MEET THE ACCEPTABLE STANDARD PER CALIFORNIA OSFM BML CATEGORY 8140

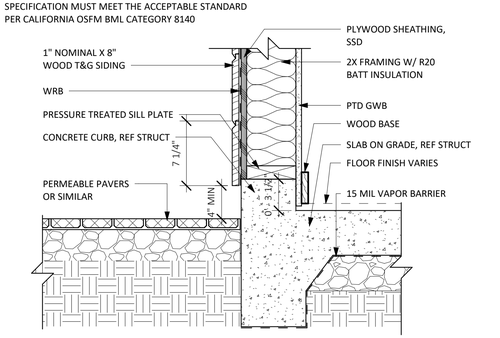

5 SLAB EDGE AT T&G SIDING / PAVERS
1 1/2" = 1'-0"

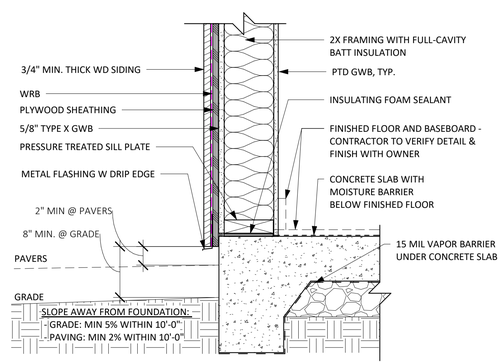

1 SLAB EDGE AT WOOD SIDING - WUI COMPLIANT
1 1/2" = 1'-0"

E5 T&G SIDING WITHIN WUI ZONE

E4 HORIZONTAL LAP SIDING - CEDAR - WUI ZONE

DETAIL GENERAL NOTES

1. BASIS OF OPAQUE WALL DESIGN IS HARDIE PANEL SIDING. FAILURE TO FOLLOW JAMES HARDIE WRITTEN INSTALLATION INSTRUCTION AND COMPLY WITH APPLICABLE BUILDING CODES MAY VIOLATE LOCAL LAWS, AFFECT BUILDING ENVELOPE PERFORMANCE, AND MAY AFFECT WARRANTY COVERAGE.
2. BASIS OF WINDOW DESIGN IS ANDERSEN 100 SERIES COMPOSITE WINDOWS, COMPLYING WITH THE PERFORMANCE REQUIREMENTS INDICATED BY TITLE 24/MECHANICAL SHEETS AND TESTED ACCORDING TO NAFS.
3. PROTECTION OF WOOD AND WOOD-BASED PRODUCTS FROM DECAY SHALL BE PROVIDED BY THE USE OF NATURALLY DURABLE WOOD OR WOOD THAT IS AWPA U1 LISTED PRESERVATIVE-TREATED FOR WOOD SIDING, SHEATHING, AND WALL FRAMING ON THE EXTERIOR OF A BUILDING HAVING A CLEARANCE OF LESS THAN 6-INCHES FROM THE GROUND OR LESS THAN 2-INCHES MEASURED VERTICALLY FROM CONCRETE STEPS, PORCH SLABS, PATIO SLABS AND SIMILAR HORIZONTAL SURFACES EXPOSED TO WEATHER [CRC R317.1.5]
4. REFERENCE STRUCTURAL DETAILS, DRAWINGS AND CALCULATIONS FOR ALL STRUCTURAL RELATED MEMBER SIZES, CONNECTION DETAILS, REBAR REQUIREMENTS AND SPACING, HARDWARE AND SPECIFICATIONS.
5. REFER TO TITLE 24/MECHANICAL SHEETS FOR MINIMUM INSULATION VALUES.

WUI NOTES

THE WILDLAND–URBAN INTERFACE (WUI) IS A ZONE OF TRANSITION BETWEEN WILDERNESS (UNOCCUPIED LAND) AND LAND DEVELOPED BY HUMAN ACTIVITY – AN AREA WHERE A BUILT ENVIRONMENT MEETS OR INTERMINGLES WITH A NATURAL ENVIRONMENT. HOMEOWNERS SHOULD VERIFY WITH THEIR JURISDICTION'S BUILDING DEPARTMENT TO SEE IF THEIR PROPERTY IS LOCATED WITHIN A WUI ZONE. THE FOLLOWING ARE MINIMUM REQUIREMENTS PER THE MOST RECENT VERSION OF THE CALIFORNIA BUILDING CODE, CHAPTER 7A, AND CALIFORNIA RESIDENTIAL CODE.

ROOFS AND ROOF EDGES. CBC 705A / CRC R337.5
ROOFS SHALL COMPLY WITH THE REQUIREMENTS OF THE CBC 705A AND SECTIONS CRC337 AND CRC902. NONCOMBUSTIBLE (TILE OR METAL) OR CLASS 'A' ROOFING (CLASS A ASPHALT SHINGLES) ASSEMBLY IS REQUIRED IN SRA - VERY HIGH FIRE HAZARD SEVERITY ZONES. WHERE THE ROOF PROFILE ALLOWS A SPACE BETWEEN THE ROOF COVERING AND THE ROOF DECKING, THE SPACES SHALL: BE CONSTRUCTED TO PREVENT THE INTRUSION OF FLAMES AND EMBERS; BE FIRESTOPPED WITH APPROVED MATERIALS; OR HAVE ONE LAYER OF NO. 72 CAP SHEET INSTALLED OVER THE COMBUSTIBLE DECKING.
WHERE PROVIDED, VALLEY FLASHING MUST BE NOT LESS THAN 26 GAUGE GALVANIZED SHEET METAL OVER A 36-INCH WIDE NO. 72 ASTM CAP SHEET.

EXTERIOR WALLS/SIDING. CBC 707A.3 /CRC R337.7.3
NONCOMBUSTIBLE, LISTED IGNITION-RESISTANT MATERIALS, HEAVY TIMBER, 5/8" TYPE X GYPSUM SHEATHING BEHIND EXTERIOR COVERING, EXTERIOR PORTION OF 1-HR ASSEMBLY OR LOG WALL CONSTRUCTION IS ALLOWED. THE OSFM WEBSITE LISTS MANY TYPES OF EXTERIOR WALL COVERINGS THAT ARE APPROVED.

EAVES AND PORCH CEILINGS CBC 707A.4, A.6 / CRC 337.7.4. R337.7.6
THE EXPOSED ROOF DECK UNDER UNENCLOSED EAVES AND UNDERSIDE OF PORCH CEILINGS SHALL BE NONCOMBUSTIBLE, LISTED IGNITION-RESISTANT MATERIALS, OR 5/8" TYPE X GYPSUM SHEATHING BEHIND EXTERIOR COVERING. SOLID WOOD RAFTER TAILS ON THE EXPOSED UNDERSIDE OF ROOF EAVES HAVING A MINIMUM 2" NOMINAL DIMENSION MAY BE UNPROTECTED.

VENTS. CBC 706A / CRC R337.6
VENTS SHALL NOT BE INSTALLED ON THE UNDERSIDE OF EAVES UNLESS THE VENTS ARE WILDLAND FLAME AND EMBER RESISTANT (WUI) VENTS APPROVED AND LISTED BY THE CALIFORNIA STATE FIRE MARSHAL, OR WUI VENTS LISTED TO ASTM E2886. AN EXCEPTION ALLOWS VENTS TO BE INSTALLED ON THE UNDERSIDE OF EAVES FOR VENTILATED ATTIC SPACES PROTECTED WITH FIRE SPRINKLERS, AND VENTS ARE LOCATED MORE THAN 12 FEET FROM THE GROUND OR WALKING SURFACE OF A DECK, PORCH, PATIO OR SIMILAR SURFACE. VENTILATION OPENINGS FOR ENCLOSED ATTICS, ENCLOSED EAVE SOFFIT SPACES, ENCLOSED RAFTER SPACES FORMED WHERE CEILINGS ARE APPLIED DIRECTLY TO THE UNDERSIDE OF ROOF RAFTERS, AND UNDERFLOOR VENTILATION OPENINGS SHALL BE FULLY COVERED WITH WILDLAND FLAME AND EMBER RESISTANT (WUI) VENTS APPROVED AND LISTED BY THE CALIFORNIA STATE FIRE MARSHAL, OR WUI VENTS LISTED TO ASTM E2886. AN EXCEPTION ALLOWS VENT 1/8" OPENINGS ON TOP OF SLOPED ROOFS THAT ARE CORROSION-RESISTANT, NONCOMBUSTIBLE WIRE MESH OR EQUIVALENT.

WINDOWS AND EXTERIOR DOORS. CBC 708A / CRC R337.8
WINDOWS MUST BE INSULATED GLASS WITH A MINIMUM OF 1 TEMPERED PANE OR 20 MIN RATED OR GLASS BLOCK. EXTERIOR DOORS MUST BE NONCOMBUSTIBLE OR IGNITION RESISTANT MATERIAL OR 1 3/8" SOLID CORE, OR HAVE A 20 MIN FIRE-RESISTANCE RATING.

EXTERIOR DECKING AND STAIRS. CBC 709A / CRC R337.9
WALKING SURFACES OF DECKS, PORCHES. BALCONIES AND STAIRS WITHIN 10 FEET OF THE BUILDING MUST BE CONSTRUCTED OF NONCOMBUSTIBLE, FIRE-RETARDANT TREATED OR HEAVY-TIMBER CONSTRUCTION. ALTERNATE MATERIALS CAN BE USED OF THEY ARE IGNITION-RESISTANT AND PASS PERFORMANCE REQUIREMENTS SPECIFIED BY THE STATE FIRE MARSHAL.

UNDERFLOOR AND APPENDAGES. CBC 707A.8 / CRC R337.7.8
EXPOSED UNDERFLOORS, UNDERSIDE OF CANTILEVERED AND OVERHANGING DECKS, BALCONIES AND SIMILAR APPENDAGES SHALL BE NON-COMBUSTIBLE, IGNITION RESISTANT, 5/8" TYPE X GYPSUM SHEATHING BEHIND EXTERIOR COVERING, EXTERIOR PORTION OF 1-HR ASSEMBLY, MEET PERFORMANCE CRITERIA SFM STANDARD 12-7A-3 OR BE ENCLOSED TO GRADE.

PERFORMANCE NOTES

ENSURE THAT MANDATORY MINIMUM REQUIREMENTS ARE MET, PER BUILDING ENERGY EFFICIENCY STANDARDS FOR RESIDENTIAL BUILDINGS / TITLE 24, PART 6, INCLUDING BUT NOT LIMITED TO:
1. SECTION 110.6: MANDATORY REQUIREMENTS FOR FENESTRATION PRODUCTS AND EXTERIOR DOORS, I.E. CERTIFICATION OF AIR LEAKAGE, U-FACTOR, SHGC, VISIBLE LIGHT TRANSMITTANCE, ETC.
2. SECTION 110.7: LIMITING AIR LEAKAGE, I.E. ALL JOINTS, PENETRATIONS AND OTHER OPENINGS IN THE BUILDING ENVELOPE THAT ARE POTENTIAL SOURCES OF AIR LEAKAGE SHALL BE CAULKED, GASKETED, WEATHER STRIPPED, OR OTHERWISE SEALED TO LIMIT INFILTRATION OR EXFILTRATION.
3. SECTION 110.8: MANDATORY REQUIREMENTS FOR INSULATION, ROOFING PRODUCTS AND RADIANT BARRIERS, INCLUDING REQUIREMENTS FOR FLAME SPREAD RATING OF INSULATION AND APPLICABLE SLAB INSULATION REQUIREMENTS.
4. SECTION 150.0: MANDATORY FEATURES AND DEVICES AND SECTION 150.1 – PERFORMANCE AND PRESCRIPTIVE COMPLIANCE APPROACHES FOR LOW-RISE RESIDENTIAL BUILDINGS (AS APPLICABLE).

FIRE RATING NOTES

1. WITHIN 3-5 FT OF PROPERTY LINE, THE WALL ASSEMBLY SHALL BE 1-HOUR RATED WITH THE AREA OF OPENINGS LIMITED TO 25% OF THE WALL AREA.

WB STANDARD:
1-HR RATED WALL PER CBC TABLE 721.1(2), ITEM #15-1.12[g]

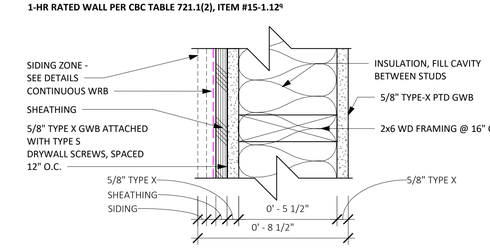

NOT TO SCALE

NOT FOR CONSTRUCTION

workbench
189 WALNUT AVENUE
SANTA CRUZ, CA 95060
WORKBENCHBUILT.COM
P: 831.227.2217

BY USING THESE PRE-DESIGNED ADU PLANS, THE RECIPIENT IS ACKNOWLEDGING ACCEPTANCE OF THE FOLLOWING CONDITIONS.

1. THE USE OF THIS INFORMATION IS RESTRICTED TO THE ORIGINAL PROJECT FOR WHICH IT WAS PREPARED (THE PRE-DESIGNED ADU PLANS FOR THE COUNTY OF PLUMAS CALIFORNIA). USE OF THESE PLANS DOES NOT ELIMINATE OR REDUCE THE RECIPIENT'S RESPONSIBILITY TO VERIFY ANY AND ALL INFORMATION RELEVANT TO THE RECIPIENT'S WORK AND RESPONSIBILITY ON THIS PROJECT. WORKBENCH AND/OR THE COUNTY OF PLUMAS SHALL NOT BE RESPONSIBLE FOR TRANSLATION ERRORS.

2. THE RECIPIENT RECOGNIZES AND ACKNOWLEDGES THAT THE USE OF THIS INFORMATION WILL BE AT THEIR SOLE RISK AND WITHOUT ANY LIABILITY OR LEGAL EXPOSURE TO WORKBENCH OR THE COUNTY OF PLUMAS. NO WARRANTIES OF ANY NATURE, WHETHER EXPRESS OR IMPLIED, SHALL ATTACH TO THESE DOCUMENTS AND THE INFORMATION CONTAINED THEREON. ANY USE, REUSE, OR ALTERATION OF THESE DOCUMENTS BY THE RECIPIENT OR BY OTHERS WILL BE AT THE RECIPIENT'S RISK AND FULL LEGAL RESPONSIBILITY. FURTHERMORE, THE RECIPIENT WILL, TO THE FULLEST EXTENT PERMITTED BY LAW, INDEMNIFY AND HOLD WORKBENCH AND THE COUNTY OF PLUMAS HARMLESS FROM ANY AND ALL CLAIMS, SUITS, LIABILITY, DEMANDS, JUDGEMENTS, OR COSTS ARISING OUT OF OR RESULTING THERE FROM ON ACCOUNT OF ANY INJURY, DEATH, DAMAGE OR LOSS TO PERSONS OR PROPERTY.

3 THE DESIGNS REPRESENTED BY THESE PLANS ARE COPYRIGHTED AND SUBJECT TO COPYRIGHT PROTECTION. IF THE RECIPIENT DOES NOT AGREE WITH THE ABOVE CONDITIONS, THE RECIPIENT SHOULD NOT PROCEED BEYOND THIS DISCLAIMER.

PLUMAS COUNTY
PRE-DESIGNED ADU
PLAN A- STARTER ONE BEDROOM ADU
705 GSF

NOT FOR CONSTRUCTION

EXTERIOR WUI AND ROOF DETAILS

A5.1

SCALE : AS NOTED

12/14/2023 10:29:44 AM

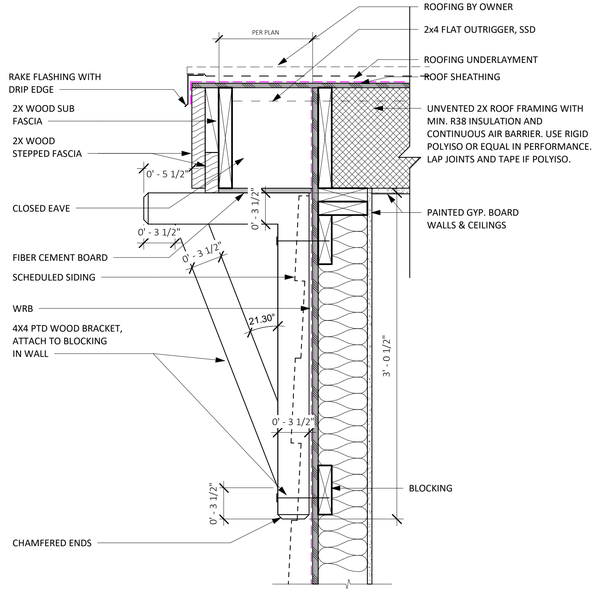

17 RAKE WITH BRACKET
1 1/2" = 1'-0"

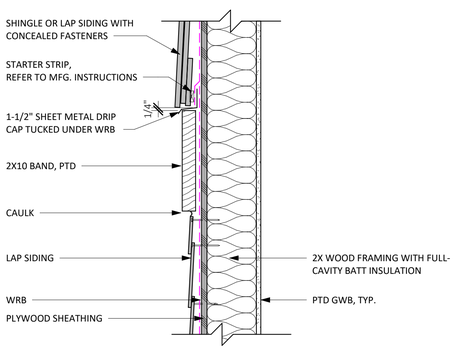

16 BELLY BAND
1 1/2" = 1'-0"

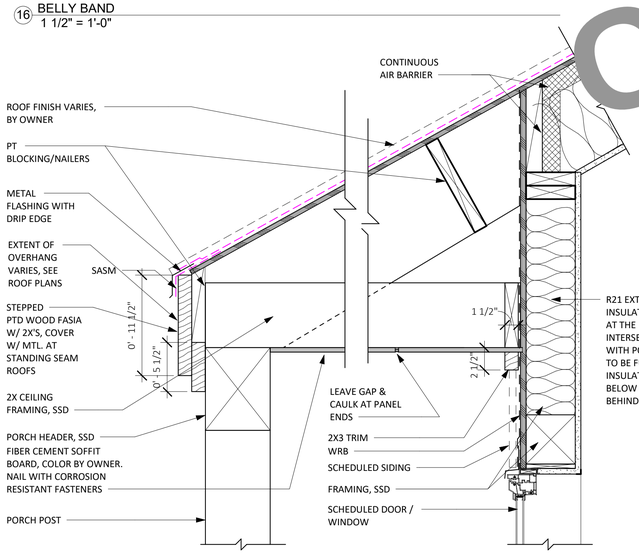

15 PORCH SOFFIT
1 1/2" = 1'-0"

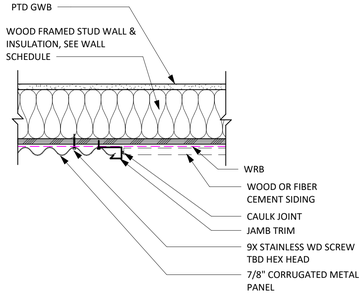

14 METAL SIDING TRANSITION ALONG WALL
1 1/2" = 1'-0"

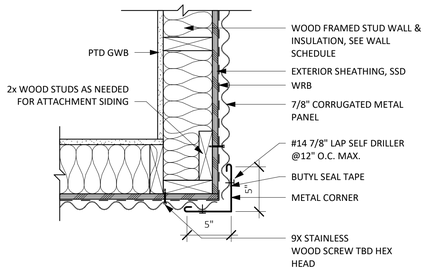

13 OUTSIDE CORNER DETAIL - METAL SIDING
1 1/2" = 1'-0"

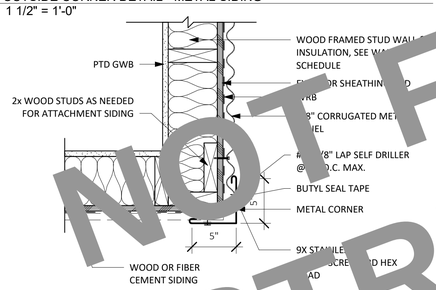

12 OUTSIDE CORNER DETAIL - METAL SIDING
1 1/2" = 1'-0"

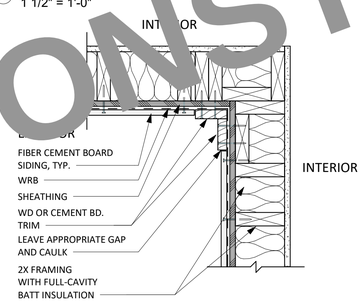

11 CEMENT BD TYP. INSIDE CORNER
1 1/2" = 1'-0"

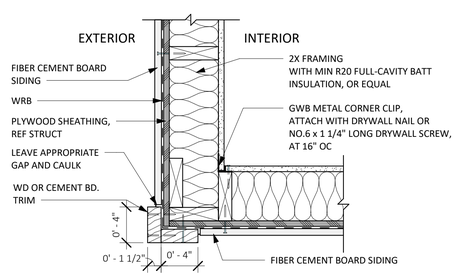

10 CEMENT BD TYP. OUTSIDE CORNER TRIM
1 1/2" = 1'-0"

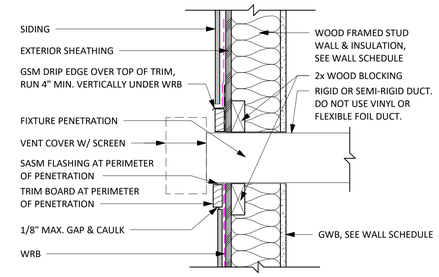

9 WALL PENETRATION DETAIL
1 1/2" = 1'-0"

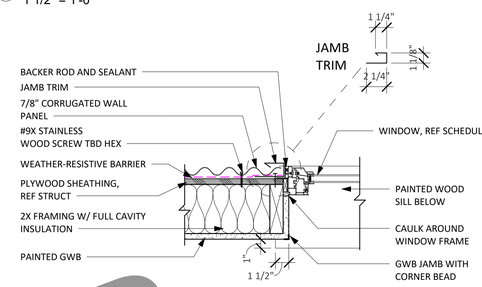

8 WINDOW JAMB AT METAL SIDING
1 1/2" = 1'-0"

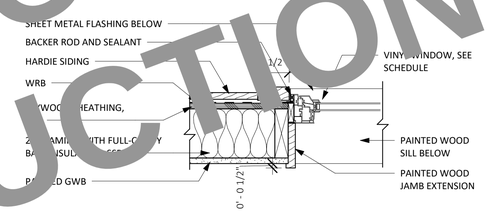

7 WINDOW JAMB @ VERTICAL SIDING
1 1/2" = 1'-0"

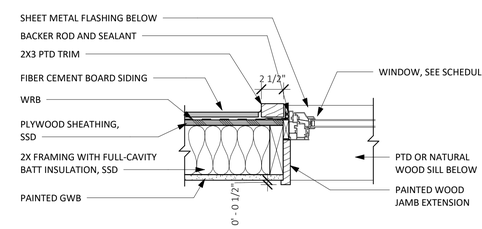

6 WINDOW JAMB @ LAP SIDING W/ 2.5" TRIM
1 1/2" = 1'-0"

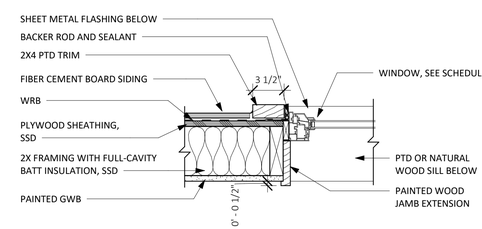

5 WINDOW JAMB @ LAP SIDING W/ 3.5" TRIM
1 1/2" = 1'-0"

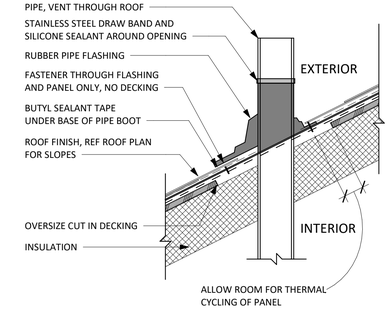

4 ROOF PENETRATION DETAIL
1 1/2" = 1'-0"

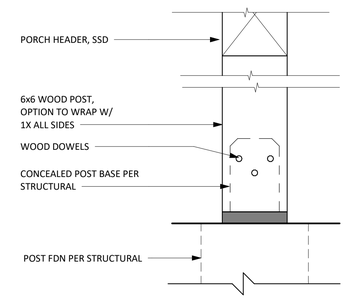

3 POST WITH CONCEALED POST TIE
1 1/2" = 1'-0"

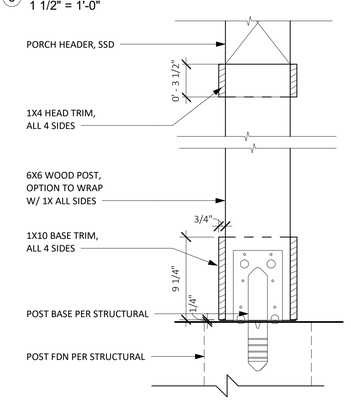

2 POST @ LAKESIDE
1 1/2" = 1'-0"

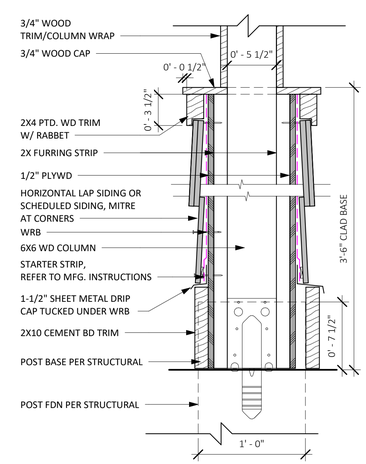

1 GOLDRUSH WRAPPED COLUMN
1 1/2" = 1'-0"

NOT FOR CONSTRUCTION

12/14/2023 11:41:14 AM

workbench

189 WALNUT AVENUE
SANTA CRUZ, CA 95060
WORKBENCHBUILT.COM
P: 831.227.2217

BY USING THESE PRE-DESIGNED ADU PLANS, THE RECIPIENT IS ACKNOWLEDGING ACCEPTANCE OF THE FOLLOWING CONDITIONS.

1. THE USE OF THIS INFORMATION IS RESTRICTED TO THE ORIGINAL PROJECT FOR WHICH IT WAS PREPARED (THE PRE-DESIGNED ADU PLANS FOR THE COUNTY OF PLUMAS CALIFORNIA). USE OF THESE PLANS DOES NOT ELIMINATE OR REDUCE THE RECIPIENT'S RESPONSIBILITY TO VERIFY ANY AND ALL INFORMATION RELEVANT TO THE RECIPIENT'S WORK AND RESPONSIBILITY ON THIS PROJECT. WORKBENCH AND/OR THE COUNTY OF PLUMAS SHALL NOT BE RESPONSIBLE FOR TRANSLATION ERRORS.

2. THE RECIPIENT RECOGNIZES AND ACKNOWLEDGES THAT THE USE OF THIS INFORMATION WILL BE AT THEIR SOLE RISK AND WITHOUT ANY LIABILITY OR LEGAL EXPOSURE TO WORKBENCH OR THE COUNTY OF PLUMAS. NO WARRANTIES OF ANY NATURE, WHETHER EXPRESS OR IMPLIED, SHALL ATTACH TO THESE DOCUMENTS AND THE INFORMATION CONTAINED THEREON. ANY USE, REUSE, OR ALTERATION OF THESE DOCUMENTS BY THE RECIPIENT OR BY OTHERS WILL BE AT THE RECIPIENT'S RISK AND FULL LEGAL RESPONSIBILITY. FURTHERMORE, THE RECIPIENT WILL, TO THE FULLEST EXTENT PERMITTED BY LAW, INDEMNIFY AND HOLD WORKBENCH AND THE COUNTY OF PLUMAS HARMLESS FROM ANY AND ALL CLAIMS, SUITS, LIABILITY, DEMANDS, JUDGEMENTS, OR COSTS ARISING OUT OF OR RESULTING THERE FROM ON ACCOUNT OF ANY INJURY, DEATH, DAMAGE OR LOSS TO PERSONS OR PROPERTY.

3 THE DESIGNS REPRESENTED BY THESE PLANS ARE COPYRIGHTED AND SUBJECT TO COPYRIGHT PROTECTION. IF THE RECIPIENT DOES NOT AGREE WITH THE ABOVE CONDITIONS, THE RECIPIENT SHOULD NOT PROCEED BEYOND THIS DISCLAIMER.

PLUMAS COUNTY PRE-DESIGNED ADU

PLAN A- STARTER ONE BEDROOM ADU

705 GSF

NOT FOR CONSTRUCTION

EXTERIOR DETAILS

A5.2

SCALE : AS NOTED

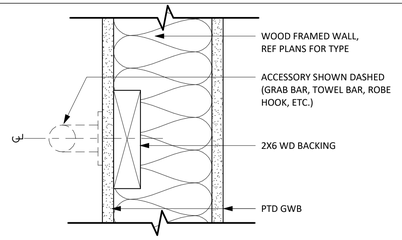

20 BLOCKING DETAIL
3" = 1'-0"

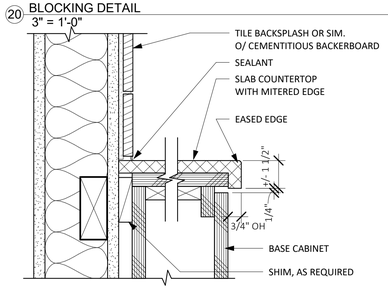

19 COUNTERTOP DETAIL
3" = 1'-0"

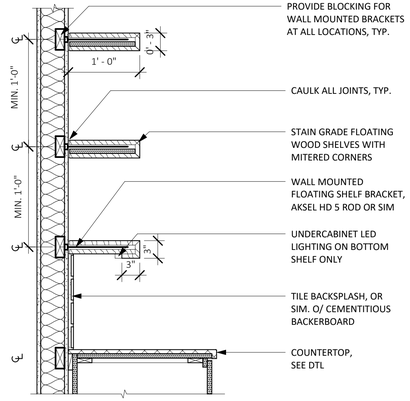

18 FLOATING WOOD SHELVES (OPTIONAL)
1" = 1'-0"

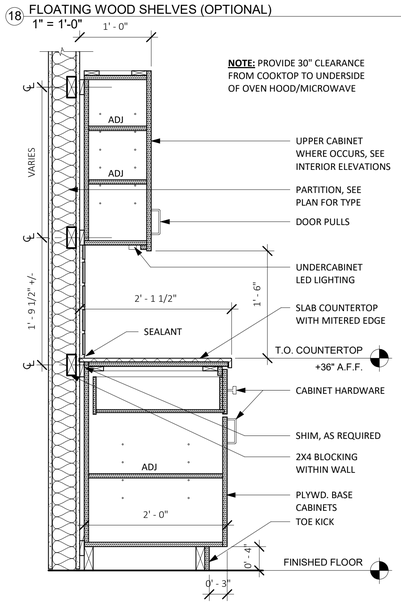

17 TYPICAL BASE CABINET WITH UPPER CABINET
1" = 1'-0"

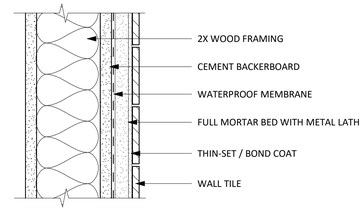

16 TYP. WALL TILE ASSEMBLY
3" = 1'-0"

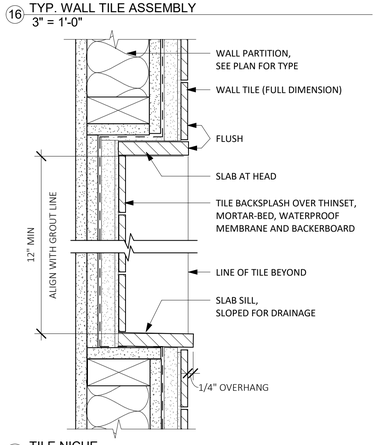

15 TILE NICHE
3" = 1'-0"

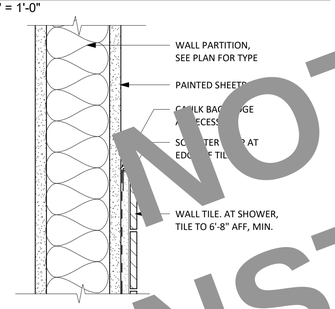

14 TILE / CK T N ON
3" = 0"

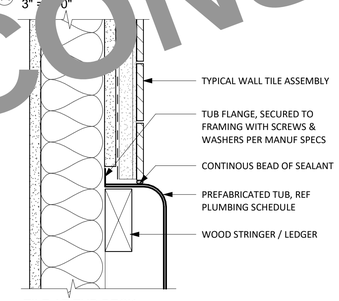

13 TILE AT TUB DECK
3" = 1'-0"

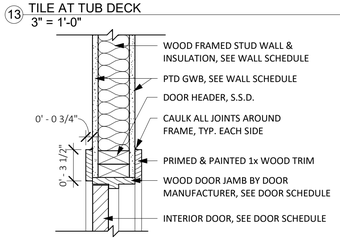

10 INTERIOR DOOR HEAD / JAMB AT GWB
1 1/2" = 1'-0"

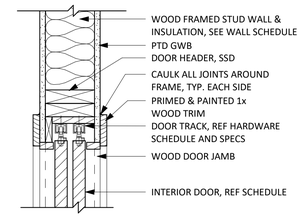

12 INTERIOR BYPASS DOOR HEAD
1 1/2" = 1'-0"

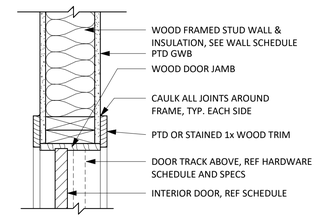

11 INTERIOR B SS DO STRIKE
1'-0"

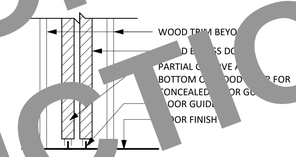

INTE R BYPASS DOOR SILL
1 1/2" = 1'-0"

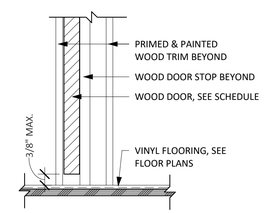

8 INTERIOR DOOR SILL
1 1/2" = 1'-0"

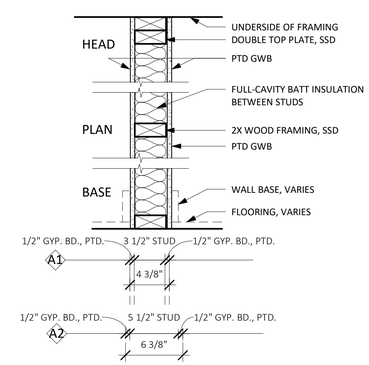

7 TYP. INTERIOR WALL PARTITION
1 1/2" = 1'-0"

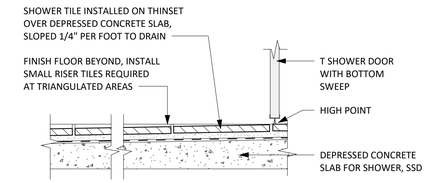

6 CURBLESS SHOWER DOOR AT SLAB (OPTIONAL)
3" = 1'-0"

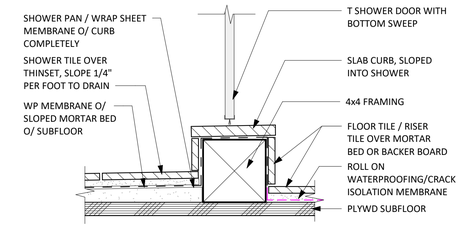

5 TYP. SHOWER CURB
3" = 1'-0"

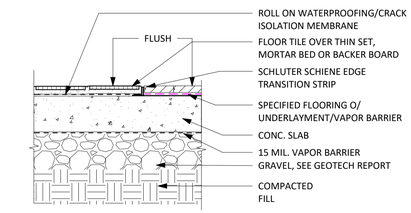

4 BASIC TILE TO WOOD FLOOR AT SLAB
1 1/2" = 1'-0"

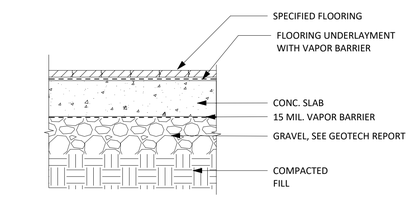

3 BASIC WOOD FLOOR AT SLAB
1 1/2" = 1'-0"

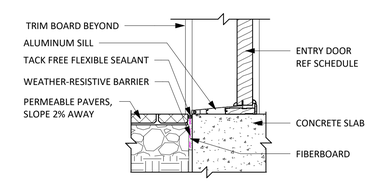

2 ENTRY DOOR SILL AT PAVERS (IF APPLICABLE)
1 1/2" = 1'-0"

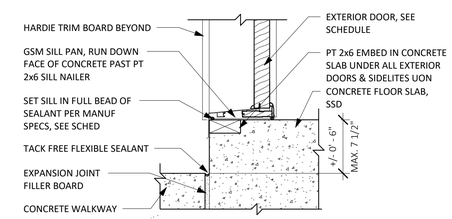

1 ENTRY DOOR SILL @ CONCRETE SLAB (IF APPLICABLE)
1 1/2" = 1'-0"

NOT FOR CONSTRUCTION

workbench
189 WALNUT AVENUE
SANTA CRUZ, CA 95060
WORKBENCHBUILT.COM
P: 831.227.2217

BY USING THESE PRE-DESIGNED ADU PLANS, THE RECIPIENT IS ACKNOWLEDGING ACCEPTANCE OF THE FOLLOWING CONDITIONS.

1. THE USE OF THIS INFORMATION IS RESTRICTED TO THE ORIGINAL PROJECT FOR WHICH IT WAS PREPARED (THE PRE-DESIGNED ADU PLANS FOR THE COUNTY OF PLUMAS CALIFORNIA). USE OF THESE PLANS DOES NOT ELIMINATE OR REDUCE THE RECIPIENT'S RESPONSIBILITY TO VERIFY ANY AND ALL INFORMATION RELEVANT TO THE RECIPIENT'S WORK AND RESPONSIBILITY ON THIS PROJECT. WORKBENCH AND/OR THE COUNTY OF PLUMAS SHALL NOT BE RESPONSIBLE FOR TRANSLATION ERRORS.

2. THE RECIPIENT RECOGNIZES AND ACKNOWLEDGES THAT THE USE OF THIS INFORMATION WILL BE AT THEIR SOLE RISK AND WITHOUT ANY LIABILITY OR LEGAL EXPOSURE TO WORKBENCH OR THE COUNTY OF PLUMAS. NO WARRANTIES OF ANY NATURE, WHETHER EXPRESS OR IMPLIED, SHALL ATTACH TO THESE DOCUMENTS AND THE INFORMATION CONTAINED THEREON. ANY USE, REUSE, OR ALTERATION OF THESE DOCUMENTS BY THE RECIPIENT OR BY OTHERS WILL BE AT THE RECIPIENT'S RISK AND FULL LEGAL RESPONSIBILITY. FURTHERMORE, THE RECIPIENT WILL, TO THE FULLEST EXTENT PERMITTED BY LAW, INDEMNIFY AND HOLD WORKBENCH AND THE COUNTY OF PLUMAS HARMLESS FROM ANY AND ALL CLAIMS, SUITS, LIABILITY, DEMANDS, JUDGEMENTS, OR COSTS ARISING OUT OF OR RESULTING THERE FROM ON ACCOUNT OF ANY INJURY, DEATH, DAMAGE OR LOSS TO PERSONS OR PROPERTY.

3 THE DESIGNS REPRESENTED BY THESE PLANS ARE COPYRIGHTED AND SUBJECT TO COPYRIGHT PROTECTION. IF THE RECIPIENT DOES NOT AGREE WITH THE ABOVE CONDITIONS, THE RECIPIENT SHOULD NOT PROCEED BEYOND THIS DISCLAIMER.

PLUMAS COUNTY PRE-DESIGNED ADU

PLAN A- STARTER ONE BEDROOM ADU
705 GSF

NOT FOR CONSTRUCTION

INTERIOR DETAILS & WALL PARTITIONS

A5.3

SCALE : AS NOTED

12/14/2023 10:29:47 AM

WINDOW SCHEDULE

USE WINDOW SCHEDULE ONLY FOR SELECTED ARCHITECTURAL STYLE
(REF. SHEET G0.0/PROJECT CHECKLIST)

WINDOW SCHEDULE - TYPE C - SUMMIT

TYPE	TAG	OPERATION	COUNT	UNIT WIDTH	UNIT HEIGHT	SILL HEIGHT	HEAD HEIGHT	COMMENTS
1	130	30" X 30" PICTURE	3	2' - 6"	2' - 6"			PROVIDE TEMPERED PANE OF EXTERIOR GLAZING IN WUI
1	160	60" X 60" PICTURE	1	5' - 0"	5' - 0"	1' - 8"	6' - 8"	PROVIDE TEMPERED PANE OF EXTERIOR GLAZING IN WUI
2	236	36" X 24" AWNING	2	3' - 0"	2' - 0"	4' - 8"	6' - 8"	PROVIDE TEMPERED PANE OF EXTERIOR GLAZING IN WUI
3	3E	30" X 48" CASEMENT (EGRESS LOCATION)	2	2' - 6"	4' - 0"	2' - 8"	6' - 8"	PROVIDE TEMPERED PANE OF EXTERIOR GLAZING IN WUI
3	348	30" X 48" CASEMENT	7	2' - 6"	4' - 0"			PROVIDE TEMPERED PANE OF EXTERIOR GLAZING IN WUI
3	360	30" X 60" CASEMENT	1	2' - 6"	5' - 0"	1' - 8"	6' - 8"	PROVIDE TEMPERED PANE OF EXTERIOR GLAZING IN WUI

WINDOW SCHEDULE - TYPE C - LAKESIDE

TYPE	TAG	OPERATION	COUNT	UNIT WIDTH	UNIT HEIGHT	SILL HEIGHT	HEAD HEIGHT	COMMENTS
2	236	36" X 24" AWNING	2	3' - 0"	2' - 0"	4' - 8"	6' - 8"	PROVIDE TEMPERED PANE OF EXTERIOR GLAZING IN WUI
3	3E	30" X 48" CASEMENT (EGRESS LOCATION)	2	2' - 6"	4' - 0"	2' - 8"	6' - 8"	PROVIDE TEMPERED PANE OF EXTERIOR GLAZING IN WUI
3	348	30" X 48" CASEMENT	9	2' - 6"	4' - 0"	2' - 8"	6' - 8"	PROVIDE TEMPERED PANE OF EXTERIOR GLAZING IN WUI
3	360	30" X 60" CASEMENT	1	2' - 6"	5' - 0"	3' - 6"	8' - 6"	PROVIDE TEMPERED PANE OF EXTERIOR GLAZING IN WUI

WINDOW SCHEDULE - TYPE C - GOLDRUSH

TYPE	TAG	OPERATION	COUNT	UNIT WIDTH	UNIT HEIGHT	SILL HEIGHT	HEAD HEIGHT	COMMENTS
1	130	30" X 30" PICTURE	1	2' - 6"	2' - 6"	8' - 0"	10' - 6"	PROVIDE TEMPERED PANE OF EXTERIOR GLAZING IN WUI
2	230	30" X 24" AWNING	2	3' - 0"	2' - 0"	4' - 8"	6' - 8"	PROVIDE TEMPERED PANE OF EXTERIOR GLAZING IN WUI
3	3E		10	2' - 6"	4' - 0"			PROVIDE TEMPERED PANE OF EXTERIOR GLAZING IN WUI
3	324	24" X 48" CASEMENT	3	2' - 0"	4' - 0"	2' - 8"	6' - 8"	PROVIDE TEMPERED PANE OF EXTERIOR GLAZING IN WUI

WINDOW SCHEDULE - TYPE C - MEADOW

TYPE	TAG	OPERATION	COUNT	UNIT WIDTH	UNIT HEIGHT	SILL HEIGHT	HEAD HEIGHT	COMMENTS
1	130	30" X 30" PICTURE	3	2' - 6"	2' - 6"			PROVIDE TEMPERED PANE OF EXTERIOR GLAZING IN WUI
1	160	60" X 60" PICTURE	1	5' - 0"	5' - 0"	1' - 8"	6' - 8"	PROVIDE TEMPERED PANE OF EXTERIOR GLAZING IN WUI
2	224	36" X 24" AWNING	2	3' - 0"	2' - 0"	4' - 8"	6' - 8"	PROVIDE TEMPERED PANE OF EXTERIOR GLAZING IN WUI
3	3E	30" X 48" CASEMENT (EGRESS LOCATION)	2	2' - 6"	4' - 0"	2' - 8"	6' - 8"	PROVIDE TEMPERED PANE OF EXTERIOR GLAZING IN WUI
3	348	30" X 48" CASEMENT	7	2' - 6"	4' - 0"			PROVIDE TEMPERED PANE OF EXTERIOR GLAZING IN WUI
3	360	30" X 60" CASEMENT	2	2' - 6"	5' - 0"	1' - 8"	6' - 8"	PROVIDE TEMPERED PANE OF EXTERIOR GLAZING IN WUI

DOOR SCHEDULE

DOOR SCHEDULE - ONE BEDROOM - TYPE B

DOOR TYPE	DOOR MARK	DESCRIPTION	DIMENSIONS			MATERIALS					DETAILS			HARDWARE GROUP
			UNIT WIDTH	UNIT HEIGHT	THICKNESS	DOOR MATERIAL	DOOR FINISH	GLAZING TYPE	FRAME MATERIAL	FRAME FINISH	HEAD	JAMB	SILL	
A	A30	INTERIOR SWING DOOR	2' - 6"	6' - 8"	0' - 2"	SC	PTD	N/A	WD	PTD				BY HOMEOWNER
A	A36	INTERIOR SWING DOOR	3' - 0"	6' - 8"	0' - 2"	SC	PTD	N/A	WD	PTD				BY HOMEOWNER
B	B48	BYPASS CLOSET DOOR	4' - 0"	7' - 0"	0' - 2"	SC	PTD	N/A	WD	PTD				BY HOMEOWNER
B	B72	BYPASS CLOSET DOOR	6' - 0"	7' - 0"	0' - 2"	SC	PTD	N/A	WD	PTD				BY HOMEOWNER
D	D36	INTERIOR CLOSET DOUBLE FLUSH DOOR	3' - 0"	6' - 8"	0' - 2"	SC	PTD	N/A	WD	PTD				BY HOMEOWNER
D	D48	INTERIOR CLOSET DOUBLE FLUSH DOOR	4' - 0"	6' - 8"	0' - 2"	SC	PTD	N/A	WD	PTD				BY HOMEOWNER
E	E	EXTERIOR ENTRY DOOR WITH GLAZING	3' - 0"	6' - 8"	0' - 1 3/8"	COMP	INT	GL-2 TEMP	COMP	INT				PER MFR
U	U24	EXTERIOR SINGLE SWING DOOR - UTILITY CLOSET	2' - 0"	6' - 8"	0' - 2"	COMP	INT	N/A	COMP	INT				PER MFR
U	U36	EXTERIOR SINGLE SWING DOOR - UTILITY CLOSET	3' - 0"	6' - 8"	0' - 2"	COMP	INT	N/A	COMP	INT				PER MFR

DOOR TYPES

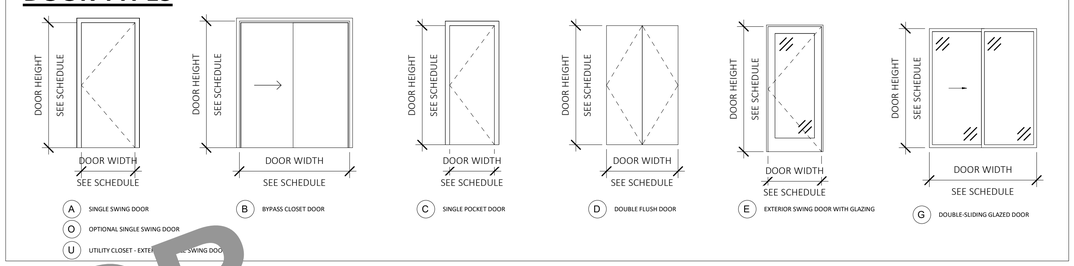

DOOR MATERIAL LEGEND

DOOR MATERIAL		DOOR FINISH		DOOR TYPE		FRAME MATERIAL		FRAME FINISH	
SC	SOLID CORE WOOD	PTD	PAINTED	REFER TO TABLE 24 SUPPORT FOR REQUIRED U-FACTOR AND SHGC VALUES, N.T.E.		WD	WOOD	PTD	PAINTED
HM	HOLLOW METAL	ST	STAINED			HM	HOLLOW METAL	ST	STAINED
ALUM	ALUMINUM	ANNO	ANODIZED ALUM	GL-1	1" OVERALL DOUBLE GLAZED UNIT	ALUM	ALUMINUM	ANNO	ANNODIZED ALUM
VIN	VINYL	INT	INTEGRAL COLOR	GL-2	1" OVERALL DOUBLE GLAZED UNIT, TEMPERED	VIN	VINYL	INT	INTEGRAL COLOR
COMP	COMPOSITE			GL-3	1" OVERALL DOUBLE GLAZED UNIT, TEMPERED, TRANSLUCENT	COMP	COMPOSITE		
E	EXISTING					E	EXISTING		

WINDOW TYPES

WINDOWS SHOWN HERE ARE GENERIC. REFERENCE ELEVATIONS FOR WINDOW STYLING AND MUNTIN LAYOUT

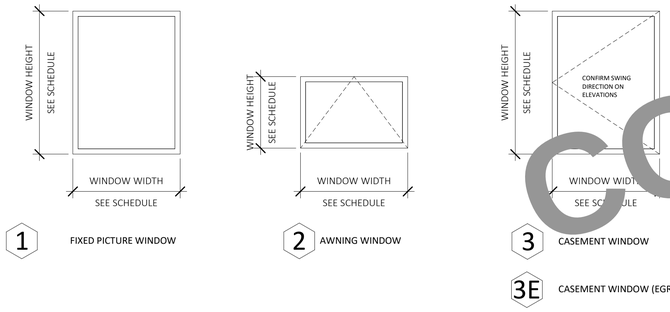

WINDOW MATERIAL LEGEND

FRAME MATERIAL		FRAME FINISH	
WD	WOOD	PTD	PAINTED
WC	WOOD-CLAD	ST	STAINED
FIBR	FIBERGLASS	ANNO	ANNODIZED ALUM
ALUM	ALUMINUM	INT	INTEGRAL COLOR
VIN	VINYL		
COMP	COMPOSITE		
E			

GLAZING TYPES

REFER TO TABLE 24 SUPPORT FOR REQUIRED U-FACTOR AND SHGC VALUES, N.T.E.

GL-1	1" OVERALL DOUBLE GLAZED UNIT
GL-2	1" OVERALL DOUBLE GLAZED UNIT, TEMPERED
GL-3	1" OVERALL DOUBLE GLAZED UNIT, TEMPERED, TRANSLUCENT

TEMPERED GLAZING LOCATIONS

1. GLAZING IN ALL FIXED AND OPERABLE PANELS OF SWINGING, SLIDING AND BIFOLD DOORS SHALL BE TEMPERED.
2. GLAZING IN AN INDIVIDUAL FIXED PANEL ADJACENT TO A DOOR SHALL BE TEMPERED.
3. GLAZING IN AN INDIVIDUAL FIXED OR OPERABLE PANEL THAT MEETS THE FOLLOWING CRITERIA SHALL BE TEMPERED:
   A. THE EXPOSED AREA IS GREATER THAN 9 SQ. FT.
   B. THE BOTTOM EDGE OF THE GLAZING IS LESS THAN 18 INCES ABOVE THE FLOOR.
   C. THE TOP EDGE OF THE GLAZING IS GREATER THAN 36 INCHES ABOVE THE FLOOR.
   D. ONE OR MORE WALKING SURFACES ARE WITHIN 36 INCHES, MEASURED ORIZONTALLY AND IN A STRAIGHT LINE, OF THE PLANE OF THE GLAZING.
4. GLAZING IN AN INDIVIDUAL FIXED OR OPERABLE PANEL ADJACENT TO A DOOR WHERE THE NEAREST VERTICAL EDGE OF THE GLAZING IS WITHIN A 24-INCH (610 MM) ARC OF EITHER VERTICAL EDGE OF THE DOOR IN A CLOSED POSITION AND WHERE THE BOTTOM EXPOSED EDGE OF THE GLAZING IS LESS THAN 60 INCHES (1524 MM) ABOVE THE WALKING SURFACE SHALL BE CONSIDERED A HAZARDOUS LOCATION. CBC 2406.4.2
5. GLAZING IN WALLS, ENCLOSURES OR FENCES CONTAINING OR ADJACENT TO HOT TUBS, SPAS, WHIRLPOOLS, SAUNAS, STEAM ROOMS, BATHTUBS, SHOWERS AND INDOOR OR OUTDOOR SWIMMING POOLS WHERE THE BOTTOM EXPOSED EDGE OF THE GLAZING IS LESS THAN 60 INCHES (1524 MM) MEASURED VERTICALLY ABOVE ANY STANDING OR WALKING SURFACE SHALL BE CONSIDERED TO BE A HAZARDOUS LOCATION. THIS SHALL APPLY TO SINGLE GLAZING AND EACH PANE IN MULTIPLE GLAZING.
6. GLAZING FOR STRUCTURES IN WUI ZONE: EXTERIOR WINDOWS, SKYLIGHTS AND EXTERIOR GLAZED DOOR ASSEMBLIES SHALL COMPLY WITH ONE OF THE FOLLOWING REQUIREMENTS: TO BE CONSTRUCTED OF MULTIPANE GLAZING WITH A MINIMUM OF ONE TEMPERED PANE MEETING THE REQUIREMENTS OF SECTION 2406 SAFETY GLAZING, OR HAVE A FIRE-RESISTANCE RATING OF NOT LESS THAN 20 MINUTES WHEN TESTED ACCORDING TO NFPA 257, OR BE TESTED TO MEET THE PERFORMANCE REQUIREMENTS OF SFM STANDARD 12-7A-2. (CBC 708A.2.1)

LIGHTING FIXTURE SCHEDULE

LIGHTING FIXTURE SCHEDULE - TWO BEDROOM - TYPE C

TYPE	DESCRIPTION	MANUFACTURER	MODEL	COUNT
F1	ADJUSTABLE LED DOWNLIGHT (LOW PROFILE)			21
F1 WP	LED DOWNLIGHT (LOW PROFILE / WATERPROOF)			7
F2	EXTERIOR WALL SCONCE			2
F3	UNDERCABINET LED STRIP LIGHT			5
F4	LED SURFACE-MOUNT LIGHT			1
F5	BATHROOM WALL SCONCE			2
F6	PENDANT LIGHTING (OPTIONAL)			1

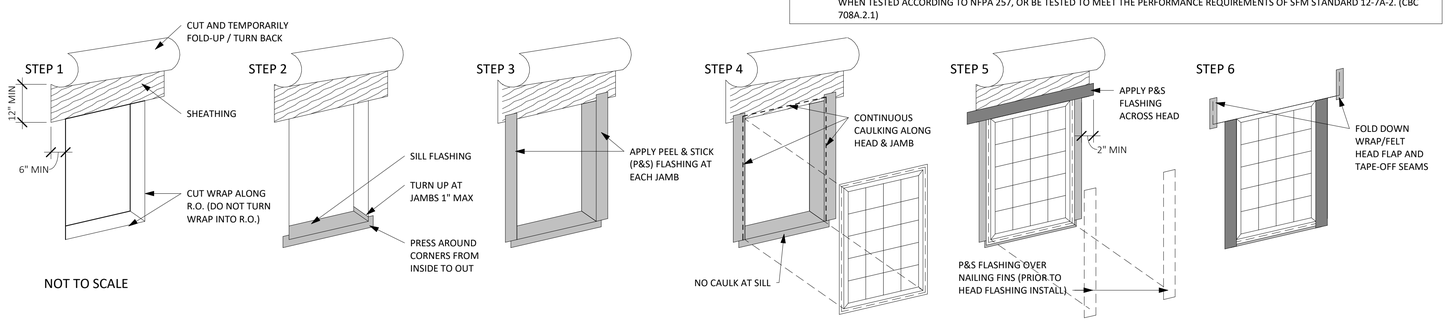

NOT TO SCALE

WINDOW FLASHING SEQUENCE
3" = 1'-0"

NOT FOR CONSTRUCTION

12/14/2023 10:30:25 AM

workbench

189 WALNUT AVENUE
SANTA CRUZ, CA 95060
WORKBENCHBUILT.COM
P: 831.227.2217

BY USING THESE PRE-DESIGNED ADU PLANS, THE RECIPIENT IS ACKNOWLEDGING ACCEPTANCE OF THE FOLLOWING CONDITIONS.

1. THE USE OF THIS INFORMATION IS RESTRICTED TO THE ORIGINAL PROJECT FOR WHICH IT WAS PREPARED (THE PRE-DESIGNED ADU PLANS FOR THE COUNTY OF PLUMAS CALIFORNIA). USE OF THESE PLANS DOES NOT ELIMINATE OR REDUCE THE RECIPIENT'S RESPONSIBILITY TO VERIFY ANY AND ALL INFORMATION RELEVANT TO THE RECIPIENT'S WORK AND RESPONSIBILITY ON THIS PROJECT. WORKBENCH AND/OR THE COUNTY OF PLUMAS SHALL NOT BE RESPONSIBLE FOR TRANSLATION ERRORS.

2. THE RECIPIENT RECOGNIZES AND ACKNOWLEDGES THAT THE USE OF THIS INFORMATION WILL BE AT THEIR SOLE RISK AND WITHOUT ANY LIABILITY OR LEGAL EXPOSURE TO WORKBENCH OR THE COUNTY OF PLUMAS. NO WARRANTIES OF ANY NATURE, WHETHER EXPRESS OR IMPLIED, SHALL ATTACH TO THESE DOCUMENTS AND THE INFORMATION CONTAINED THEREON. ANY USE, REUSE, OR ALTERATION OF THESE DOCUMENTS BY THE RECIPIENT OR BY OTHERS WILL BE AT THE RECIPIENT'S RISK AND FULL LEGAL RESPONSIBILITY. FURTHERMORE, THE RECIPIENT WILL, TO THE FULLEST EXTENT PERMITTED BY LAW, INDEMNIFY AND HOLD WORKBENCH AND THE COUNTY OF PLUMAS HARMLESS FROM ANY AND ALL CLAIMS, SUITS, LIABILITY, DEMANDS, JUDGEMENTS, OR COSTS ARISING OUT OF OR RESULTING THERE FROM ON ACCOUNT OF ANY INJURY, DEATH, DAMAGE OR LOSS TO PERSONS OR PROPERTY.

3 THE DESIGNS REPRESENTED BY THESE PLANS ARE COPYRIGHTED AND SUBJECT TO COPYRIGHT PROTECTION. IF THE RECIPIENT DOES NOT AGREE WITH THE ABOVE CONDITIONS, THE RECIPIENT SHOULD NOT PROCEED BEYOND THIS DISCLAIMER.

PLUMAS COUNTY PRE-DESIGNED ADU

PLAN C- TWO BEDROOM ADU
990 GSF

NOT FOR CONSTRUCTION

C - SCHEDULES

A6.0

SCALE : AS NOTED

PLYWOOD SHEAR WALL SCHEDULE

MARK	MATERIAL	NAILING OF PANEL EDGES, COLLECTORS AND TIES (EN)	FIELD NAILING (FN)	TOP PLATE CONNECTION	MINIMUM FND PLATE THICKNESS	BOTTOM PLATE CONNECTION	ANCHOR BOLTS SIZE	ANCHOR BOLTS SPACING (O.C.)	ALLOWABLE SHEAR (plf)
1	1/2" CDX	10d @ 6"	10d @ 12"	A35 at 18"	2x	16d @ 6"	5/8"	48"	260
2	1/2" CDX	10d @ 4"	10d @ 12"	A35 at 12"	2x	16d @ 4"	5/8"	42"	380
3	1/2" CDX	10d @ 3"	10d @ 12"	A35 at 10"	2x	16d @ 3"	5/8"	30"	490

NOTES:

1. NAIL SIZE NOTED IN TABLE IS FOR COMMON OR GALVANIZED BOX NAILS. IF BOX OR SINKER NAILS ARE USED, THEN THE NEXT LARGER SHEAR MARK THAN THAT WHICH IS SHOWN ON PLANS, SHALL BE USED.
2. WHERE NAILS ARE SPACED LESS THAN 4 INCHES ON CENTER, FRAMING MEMBER AND/OR BLOCKING AT ADJOINING PANEL EDGES SHALL BE 3" NOMINAL OR GREATER AND STAGGERED NAILING. OR USE DOUBLE FRAMING MEMBERS THAT ARE AT LEAST 2" IN NOMINAL THICKNESS.
3. A35 FRAMING CLIPS SHALL BE BY SIMPSON STRONG-TIE CO., INC.
4. STAGGER VERTICAL JOINTS WHERE PLYWOOD IS APPLIED TO BOTH SIDES OF THE WALL.
5. ALL FASTENERS (BOLTS, NAILS, WASHERS, FRAMING CLIPS, ETC.) EXPOSED TO WEATHER OR IN CONTACT WITH PRESSURE TREATED LUMBER SHALL BE HOT-DIP GALVANIZED ZINC COATED OR STAINLESS STEEL.
6. ALL PANEL EDGES SHALL BE BACKED WITH 2x NOMINAL OR WIDER FRAMING.
7. ALL ANCHOR BOLTS SHALL BE 5/8" DIAMETER EMBEDDED AT LEAST 7 INCHES INTO CONCRETE WITH 3x3x1/4" STEEL PLATE WASHERS, UNO. THE PLATE WASHER SHALL EXTEND TO WITHIN 1/2" OF THE EDGE OF THE BOTTOM PLATE ON THE SIDE WITH SHEATHING
8. OSB OF THE SAME THICKNESS MAY BE SUBSTITUTED FOR CDX PLYWD SCHEDULED ABOVE.
9. PLYWOOD MAY BE INSTALLED OVER 5/8" GYPSUM WALL BOARD WHERE 1-HR FIRE RATING IS REQUIRED. SEE ARCHITECTURAL DWGS FOR FIRE RATING NOTES

ABBREVIATIONS

AB	Anchor Bolt	(E)	Existing	PLY	Plywood
ABV	Above	EA	Each	PSF	Pounds per Square Foot
ACI	American Concrete Institute	EN	Edge Nailing	PSI	Pounds per Square Inch
ALT	Alternate	ENGR	Engineer	PTDF	Preservative Treated Douglas Fir
APA	American Plywood Association	EXT	Exterior	RDWD	Redwood
ARCH	Architect	FLR	Floor	REINF	Reinforcement
BD	Board	FND	Foundation	REQD	Required
BLK(G)	Block(ing)	FOC	Face of Concrete	RF	Roof
BLW	Below	FOS	Face of Stud	RM	Room
BM	Beam	FRMG	Framing	RTW	Retaining Wall
BN	Boundary Nailing	FT	Foot or Feet	SAD	See Architectural Drawings
BP	Base Plate	FTG	Footing	SB	Solid Blocking
BRG	Bearing	GALV	Galvanized	SF	Square Foot
BTWN	Between	GL	Glued Laminated	SIM	Similar
CBC	CA Building Code	GYP	Gypsum	SPEC	Specifications
CL	Center Line	HD	Holdown	SQ	Square
CLG	Ceiling	HDR	Header	SS	Stainless Steel
CLR	Clear, Clearance	HORIZ	Horizontal	STD	Standard
COL	Column	HT	Height	[illegible]	[illegible]
CONC	Concrete	INT	Interior	[illegible]	[illegible]ght
CONN	Connection	JST(S)	Joist(s)	T&B	Top and Bottom
CONT	Continuous	MB	Machine Bolt	T&G	Tongue and Groove
CNTR	Center	MI	Malleable Iron	TOC	Top of Concrete
CRC	CA Residential Code	MIN	Minimum	TOW	Top of Wall
DBL	Double	(N)	New	TR	Threaded Rod
DF	Douglas Fir	OC	On Center	TYP	Typical
DIA	Diameter	OH	Opposite Hand	UNO	Unless Noted Otherwise
DTL	Detail	OPNG	Opening	VIF	Verify In Field
DWG	Drawing	PAF	Powder Actuated Fastener	∅	Diameter
		PL	Plate or Property Line		

NOT FOR CONSTRUCTION

STRUCTURAL NOTES AND SPECIFICATIONS

A. DESIGN CRITERIA

1. CODE = 2022 CALIFORNIA RESIDENTIAL CODE (CRC)
   2022 CALIFORNIA BUILDING CODE (CBC)
2. FLOOR LIVE LOAD = 40 PSF
3. SNOW LOAD = 200 PSF
4. FLAT ROOF SNOW LOAD = 200 PSF
5. WIND DESIGN DATA:
   V_{ULT} = 110 MPH (V_{ASD} = 85 MPH), EXPOSURE C
6. SEISMIC DESIGN DATA:
   SITE CLASS = D (DEFAULT)
   S_S=1.156, S_1=0.378
   SEISMIC DESIGN CATEGORY = D
   SEISMIC FORCE RESISTING SYSTEM:
   LIGHT FRAMED WOOD SHEAR WALLS, R = 6.5

B. GENERAL

1. ALL PROJECTS SHALL COMPLY WITH THE 2022 CALIFORNIA RESIDENTIAL CODE (CRC) AND/OR 2022 CALIFORNIA BUILDING CODE (CBC).

2. THE CONTRACTOR SHALL EXAMINE CAREFULLY THE SITE OF WORK CONTEMPLATED, THE PLANS, AND SPECIFICATIONS; THEREFORE, THE SUBMISSION OF A BID SHALL BE CONCLUSIVE EVIDENCE THAT THE CONTRACTOR HAS INVESTIGATED AND IS SATISFIED AS TO THE CONDITIONS TO BE ENCOUNTERED, THE CHARACTER, QUALITY, AND SCOPE OF WORK TO BE PERFORMED, THE QUANTITIES OF MATERIALS TO BE FURNISHED, AND AS TO THE REQUIREMENTS OF THE PLANS AND THESE SPECIFICATIONS.

3. ALL CONSTRUCTION AND MATERIALS SHALL BE AS SPECIFIED AND AS REQUIRED BY THE LATEST EDITION OF THE CALIFORNIA BUILDING CODE, THE CALIFORNIA BUILDING CODE STANDARDS, AND LOCALLY ENFORCED CODES AND AUTHORITIES. ALL ARTICLES, MATERIALS, AND EQUIPMENT SHALL BE INSTALLED, APPLIED, AND CONNECTED AS DIRECTED BY THE MANUFACTURER'S LATEST WRITTEN SPECIFICATIONS EXCEPT WHERE OTHERWISE NOTED. MATERIAL NOTES ON THE DRAWINGS SHALL TAKE PRECEDENCE OVER THESE SPECIFICATIONS.

4. IN THE EVENT THAT CERTAIN FEATURES OF THE CONSTRUCTION ARE NOT FULLY SHOWN, THEIR CONSTRUCTION SHALL BE AS SHOWN FOR SIMILAR FEATURES. ALL DIMENSIONS SHALL TAKE PRECEDENCE OVER SCALE SHOWN ON THE PLANS.

5. IT SHALL BE THE CONTRACTOR'S SOLE RESPONSIBILITY TO DESIGN AND PROVIDE ADEQUATE SHORING, BRACING, FORMWORK, ETC., AS REQUIRED FOR THE PROTECTION OF LIFE AND PROPERTY DURING CONSTRUCTION.

6. THE CONTRACTOR SHALL EXAMINE AND CHECK ALL EXISTING CONDITIONS, DIMENSIONS, LEVELS, AND MATERIALS AND NOTIFY THE OWNER, ARCHITECT, OR ENGINEER OF ANY DISCREPANCIES BEFORE PROCEEDING WITH THE WORK. SHOULD A DISCREPANCY APPEAR IN THE SPECIFICATIONS OR DRAWINGS, OR IN THE WORK DONE BY OTHERS FROM THE CONTRACT DOCUMENTS, THAT AFFECT ANY WORK, THE ARCHITECT OR ENGINEER SHALL BE NOTIFIED AT ONCE FOR INSTRUCTIONS ON HOW TO PROCEED. IF THE CONTRACTOR PROCEEDS WITH THE WORK AFFECTED, WITHOUT INSTRUCTIONS FROM THE ARCHITECT OR ENGINEER, THE CONTRACTOR SHALL MAKE GOOD ANY RESULTING DAMAGE OR DEFECT TO THE SATISFACTION OF THE ARCHITECT OR ENGINEER. SHOULD A CONFLICT OCCUR IN, OR BETWEEN DRAWINGS AND SPECIFICATIONS, OR WHERE DETAIL REFERENCES ON CONTRACT DRAWINGS HAVE BEEN OMITTED, THE CONTRACTOR IS DEEMED TO HAVE ESTIMATED THE MOST EXPENSIVE MATERIALS AND CONSTRUCTION METHOD INVOLVED, UNLESS A WRITTEN DECISION OF THE ARCHITECT OR ENGINEER HAS BEEN OBTAINED WHICH DESCRIBES AN ALTERNATE METHOD AND/OR MATERIALS.

7. ALL MATERIAL STORED ON SITE SHALL BE PROPERLY STACKED AND PROTECTED TO PREVENT DAMAGE AND DETERIORATION UNTIL USE. FAILURE TO PROTECT MATERIAL MAY BE CAUSE FOR REJECTION OF WORK.

8. THE CONTRACTOR SHALL DO ALL CUTTING, FITTING, OR PATCHING OF HIS WORK THAT MAY BE REQUIRED TO MAKE ITS SEVERAL PARTS FIT TOGETHER PROPERLY, AND SHALL NOT ENDANGER ANY OTHER WORK BY CUTTING, OR OTHERWISE ALTERING, THE TOTAL WORK OR ANY PART OF IT. CONTRACTOR SHALL EXERCISE CARE TO PROTECT ANY EXISTING CONSTRUCTION SO THAT INTEGRITY AND FINISH ARE NOT IMPAIRED. ALL PATCHING, REPAIRING, AND REPLACING OF MATERIALS AND SURFACES CUT OR DAMAGED IN EXECUTION OF WORK, SHALL BE DONE WITH APPROPRIATE MATERIALS SO THAT THE SURFACES REPLACED WILL, UPON COMPLETION, MATCH SURROUNDING SIMILAR SURFACES.

9. THE CONTRACTOR SHALL PROVIDE ALL NECESSARY BLOCKING, BACKING, AND FRAMING FOR LIGHT FIXTURES, ELECTRICAL UNITS, PLUMBING FIXTURES, TOILET ROOM ACCESSORIES, HEATING EQUIPMENT, AND ALL OTHER ITEMS REQUIRING SUPPORT.

C. EARTHWORK

1. FOOTINGS SHALL BE EMBEDDED AT LEAST 18 INCHES BELOW EXTERIOR FINISHED GRADE AND EXTEND AT LEAST 12" INTO UNDISTRUBED NATIVE SOIL. FOOTINGS ARE PROPORTIONED PER PLUMAS COUNTY BUILDING DEPARTMENT FOR AN ALLOWABLE SOIL PRESSURE OF 2000 P.S.F.

2. CONTRACTOR SHALL CAREFULLY EXCAVATE ALL MATERIALS NECESSARY OF WHATEVER NATURE, FOR CONSTRUCTION OF THE WORK. ANY MATERIAL OF AN UNSUITABLE OR DELETERIOUS NATURE DISCOVERED BELOW THE BOTTOMS OF THE FOUNDATIONS SHALL BE BROUGHT TO THE ATTENTION OF THE ENGINEER BEFORE PROCEEDING WITH THE WORK.

3. THE INCLUDED FOUNDATION DESIGN IS BASED ON CBC PRESUMPTIVE LOAD BEARING VALUES. SOME SITES MAY REQUIRE A GEOTECHNICAL INVESTIGATION REPORT. AN ALTERNATIVE FOUNDATION DESIGN MAY BE REQUIRED TO CONFORM TO THE RECOMMENDATIONS OF THE GEOTECHNICAL INVESTIGATION REPORT. THE ALTERNATIVE FOUNDATION DESIGN SHALL BE PREPARED BY A LICENSED CIVIL OR STRUCTURAL ENGINEER AND SHALL BE APPROVED BY THE CITY. IN THIS CASE, THE ALTERNATIVE FOUNDATION DESIGN SUPERSEDES THE FOUNDATION PLAN AND DETAILS SHOWN ON THESE DRAWINGS .

D. CONCRETE

1. POURED IN PLACE CONCRETE WORK SHALL BE CONSTRUCTED OF NORMAL WEIGHT, PORTLAND CEMENT CONCRETE, HAVING A MINIMUM 28-DAY COMPRESSIVE STRENGTH OF 3000 PSI (DESIGN BASED ON 2500 PSI). ALL PORTLAND CEMENT CONCRETE SHALL CONFORM TO THE REQUIREMENTS OF ACI 318, "BUILDING CODE REQUIREMENTS FOR REINFORCED CONCRETE", LATEST EDITION. MAXIMUM CONCRETE SLUMP SHALL BE 4 INCHES. THE USE OF ANY ADMIXTURE IN THE CONCRETE MUST BE APPROVED BY THE ENGINEER.

2. CONCRETE MIX DESIGN MAY SUBSTITUTE A MAXIMUM OF 25% OF THE REQUIRED CEMENT CONTENT WITH RECYCLED FLY ASH.

3. ALL NEWLY PLACED CONCRETE SHALL BE CURED IN ACCORDANCE WITH THE PROVISIONS IN ACI 308, "STANDARD PRACTICE FOR CURING CONCRETE," LATEST EDITION. METHOD OF CURING SHALL BE AT THE OPTION OF THE CONTRACTOR WITH APPROVAL OF THE OWNER.

4. ALL METAL ANCHORAGE DEVICES, ANCHOR BOLTS, ETC. SHALL BE SECURED IN PLACE AND INSPECTED BY ENGINEER PRIOR TO PLACING CONCRETE.

5. ALL WORK DONE UNDER THIS SECTION SHALL CONFORM WITH THE APPLICABLE PORTIONS OF ACI 318, LATEST EDITION.

E. REINFORCEMENT

1. USE GRADE 40 DEFORMED REINFORCING FOR #4 AND SMALLER BARS AND GRADE 60 FOR #5 AND LARGER BARS CONFORMING TO THE REQUIREMENTS OF ASTM A615. STAGGERED REINFORCING BAR CONTACT SPLICES SHALL LAP 40 DIAMETERS. SUPPORT HORIZONTAL STEEL AT BOTTOM ON MORTAR BLOCKS. MINIMUM CLEARANCE SHALL BE 3 INCHES FOR SURFACES POURED AGAINST EARTH AND 1.5 INCHES ELSEWHERE U.N.O.

2. ALL REINFORCING SHALL BE SECURED IN PLACE AND INSPECTED BY THE ENGINEER PRIOR TO PLACING ANY CONCRETE OR GROUT.

3. ALL WORK DONE UNDER THIS SECTION SHALL CONFORM WITH THE APPLICABLE PORTIONS OF ACI 318, LATEST EDITION.

F. WOOD FRAMING

1. ALL CONSTRUCTION SHALL CONFORM TO THE "GENERAL CONSTRUCTION REQUIREMENTS", THE "CONVENTIONAL CONSTRUCTION PROVISIONS", AND ANY OTHER APPLICABLE SECTION OF CHAPTER 23 OF THE CBC UNLESS NOTED OTHERWISE IN THE PLANS OR THESE SPECIFICATIONS.

2. NO STRUCTURAL MEMBER SHALL BE CUT OR NOTCHED UNLESS SPECIFICALLY SHOWN, NOTED, OR APPROVED BY THE ENGINEER. HOLES IN WOOD SILLS OR PLATES OF SHEAR OR BEARING WALLS SHALL BE PLACED IN THE CENTER OF THE PIECE. HOLES IN EXCESS OF 1 INCH DIAMETER ARE NOT PERMITTED IN ANY MEMBER OF A SHEAR WALL, NOR IN ANY TWO-BY-FOUR DOUBLE TOP PLATES. TWO-BY-SIX DOUBLE TOP PLATES MAY HAVE UP TO TWO-INCH DIAMETER HOLES UNLESS NOTED OTHERWISE. HOLES LARGER THAN NOTED ABOVE MAY BE BORED IN SILLS PROVIDING THE SILL IS CONSIDERED CUT IN TWO AND ANCHOR BOLTS PLACED ACCORDINGLY.

3. DRILLING AND NOTCHING OF STUDS. ANY STUD IN AN EXTERIOR WALL OR BEARING PARTITION MAY BE CUT OR NOTCHED TO A DEPTH NOT EXCEEDING 25% OF ITS WIDTH. STUDS IN NONBEARING PARTITIONS MAY BE NOTCHED TO A DEPTH NOT TO EXCEED 40% OF A SINGLE STUD WIDTH. ANY STUD MAY BE BORED OR DRILLED, PROVIDED THE DIAMETER OF THE RESULTING HOLE IS NO MORE THAN 60% OF THE STUD WIDTH, THE EDGE OF THE HOLE IS NO MORE THAN 5/8 INCH TO THE EDGE OF THE STUD, AND THE HOLE IS NOT LOCATED IN THE SAME SECTION AS A CUT OR NOTCH. STUDS LOCATED IN EXTERIOR WALL OR BEARING PARTITIONS DRILLED OVER 40% AND UP TO 60% SHALL ALSO BE DOUBLED WITH NO MORE THAN TWO SUCCESSIVE STUDS BORED.

F. WOOD FRAMING (CONTINUED)

4. DRILLING AND NOTCHING OF TOP PLATE. WHEN PIPING OR DUCTWORK IS PLACED IN OR PARTLY IN AN EXTERIOR WALL OR INTERIOR LOAD-BEARING WALL, NECESSITATING CUTTING, DRILLING, OR NOTCHING OF THE TOP PLATE BY MORE THAN 50% OF ITS WIDTH, A GALVANIZED METAL TIE NOT LESS THAN 0.054-INCH THICK AND 1-1/2-INCHES WIDE SHALL BE FASTENED ACROSS AND TO THE PLATE AT EACH SIDE OF THE OPENING WITH NOT LESS THAN 8 10D NAILS HAVING A MINIMUM LENGTH OF 1-1/2 INCHES AT EACH SIDE OR EQUIVALENT. THE METAL TIE MUST EXTEND MINIMUM 6 INCHES PAST THE OPENING.

5. ALL WOOD FRAMING SHALL BE OF DOUGLAS FIR AND SHALL BE OF THE GRADE SPECIFIED IN THESE SPECIFICATIONS UNLESS NOTED OTHERWISE IN THE PLANS, AND SHALL BE MANUFACTURED AND GRADED PER WWPA GRADING RULES, LATEST EDITION.

   SILLS.....PTDF NO. 2 OR BETTER
   JOISTS, RAFTERS, BEAMS, HEADERS.....UP TO 4x - DF NO. 2
   6x - DF NO. 1
   STUDS AND BLOCKING.....DF STANDARD, NO. 2 OR BETTER
   POSTS AND DOUBLE TOP PLATES.....DF NO. 1
   GLULAM BEAMS.....DF 24F-V4
   1.75x LVL.....BOISE CASCADE VERSA-LAM LVL 2.1E 2800 DF
   3.5x, 5.25x & 7x LVL BEAMS.....BOISE CASCADE VERSA-LAM LVL 2.1E 3100 DF
   RIM BOARD AND BLKG.....BOISE CASCADE VERSA-LAM LVL 1.8E 2400 DF
   3.5x, 5.25x & 7x LVL POST.....BOISE CASCADE VERSA-LAM LVL 2.1E 3100 DF

6. ALL PLYWOOD SHEATHING SHALL BE APA RATED SHEATHING, EXTERIOR EXPOSURE, CONFORMING TO THE LATEST EDITION OF U.S. PRODUCT STANDARD PS 1 FOR CONSTRUCTION AND INDUSTRIAL PLYWOOD. ALL PLIES SHALL BE GROUP 1 OR 2 SPECIES. SPACE PANEL ENDS AND EDGES 1/8" MINIMUM. WHERE WET OR HUMID CONDITIONS PREVAIL, DOUBLE THIS SPACING. MINIMUM SIZE OF PLYWOOD PANELS SHALL BE 2' x 4'.

7. FOR SHEAR WALL NAILING, ANCHOR BOLTS, AND SHEAR TRANSFER DEVICES, SEE SHEAR WALL SCHEDULE AND DETAILS.

8. STUD WALLS SUPPORTING BEAMS SHALL HAVE POSTS WITH A MINIMUM WIDTH EQUAL TO THE WIDTH OF THE BEAM LOCATED BELOW THE BEAM, UNLESS NOTED OTHERWISE.

9. ALL METAL FRAMING DEVICES SHALL BE AS MANUFACTURED BY SIMPSON STRONG-TIE COMPANY OR APPROVED EQUAL, AND INSTALLED IN CONFORMANCE WITH THE MANUFACTURER'S SPECIFICATIONS. ONLY SIMPSON "N" TYPE FASTENERS SHALL BE USED. ALL SUCH FASTENERS SHALL BE OF THE LARGEST SIZE AND QUANTITY SPECIFIED IN THE MANUFACTURER'S PUBLISHED SCHEDULES, U.N.O.

10. BOLT HOLES SHALL BE 1/16 INCH LARGER THAN THE NOMINAL SIZE OF THE BOLT. CUT FLAT WASHERS SHALL BE PROVIDED AT ALL HEADS AND NUTS WHICH WOULD OTHERWISE BEAR DIRECTLY ON WOOD. ALL BOLTS SHALL BE TIGHTENED TO A SNUG CONDITION AND RETIGHTENED UPON JOB COMPLETION OR IMMEDIATELY BEFORE CONSTRUCTING WORK WHICH WILL MAKE THEM INACCESSIBLE.

11. USE COMMON TYPE NAILS U.N.O. WHERE NOT SPECIFIED OTHERWISE, THE NAILING REQUIREMENTS OF CBC TABLE 2304.9.1 OR CRC TABLE R602.3(1) SHALL APPLY.

12. ALL WOOD FRAMING MEMBERS IN CONTACT WITH CONCRETE OR EXPOSED TO WEATHER SHALL BE PRESERVATIVE TREATED OR NATURAL DURABLE WOOD ACCORDING TO CRC R317.1.

13. ALL FASTENERS (NAILS, BOLTS, CONNECTORS, ETC.) EXPOSED TO WEATHER OR IN CONTACT WITH PRESERVATIVE TREATED LUMBER SHALL BE HOT DIPPED GALVANIZED ZINC COATED, Z-MAX, OR STAINLESS STEEL. SEE THE RECOMMENDATIONS IN THE CORROSION INFORMATION SECTION OF THE SIMPSON WOOD CONSTRUCTION CONNECTORS CATALOG TO DETERMINE WHICH TYPE OF COATING IS APPROPRIATE FOR THE CONNECTOR APPLICATION, BASED ON THE TYPE OF PRESERVATIVE USED TO TREAT THE WOOD AND THE ENVIRONMENT. WHEN STAINLESS STEEL CONNECTORS ARE USED STAINLESS STEEL FASTENERS SHOULD BE USED. WHEN HOT-DIPPED GALVANIZED OR Z-MAX CONNECTORS ARE USED, FASTENERS SHALL BE GALVANIZED PER ASTM A153.

14. WOOD STUD WALLS SHALL BE CAPPED WITH A DOUBLE TOP PLATE INSTALLED TO PROVIDE OVERLAPPING AT CORNERS AND AT INTERSECTIONS WITH OTHER PARTITIONS. END JOINTS IN DOUBLE TOP PLATES SHALL BE OFFSET AT LEAST 24 INCHES. JOINTS IN PLATES NEED NOT OCCUR OVER STUDS. PLATES SHALL BE MINIMUM NOMINAL 2 INCHES THICK AND HAVE WIDTH AT LEAST EQUAL TO WIDTH OF STUDS.

15. TOP PLATE LAP SPLICES SHALL BE FACE-NAILED WITH A MINIMUM OF (8) 16D NAILS ON EACH SIDE OF SPLICE. MINIMUM LAP SHALL BE 4 FEET LONG NAILED WITH (2) 16D AT 16 INCHES CENTER-TO-CENTER. NAILS AND CUTS IN PLATES SHALL OCCUR OVER STUDS.

16. STUDS SHALL HAVE FULL BEARING ON NOMINAL 2-INCH THICK OR LARGER SILL PLATE WITH WIDTH AT LEAST EQUAL TO STUD WIDTH.

17. WALL PLATES OR SILLS SHALL BE ANCHORED TO FOOTINGS WITH 5/8" DIA STEEL ANCHOR BOLTS EMBEDDED AT LEAST 7" INTO CONCRETE AND SPACED NOT MORE THAN 4'-0" O.C. THERE SHALL BE A MINIMUM OF TWO BOLTS PER PIECE WITH ONE BOLT LOCATED NOT MORE THAN 12" OR LESS THAN 7 BOLT DIAMETERS (4 1/2") FROM THE END OF THE PIECE. ANCHOR BOLTS SHALL BE PROVIDED WITH 3"x3"x1/4" PLATE WASHERS AND NUTS. ANCHOR BOLT SPACING ON SHEAR SCHEDULE SHALL TAKE PRECEDENCE.

G. BOISE CASCADE ENGINEERED WOOD PRODUCTS

1. ALL PREFABRICATED STRUCTURAL LUMBER PRODUCTS SHALL BE MANUFACTURED BY BOISE CASCADE, UNLESS NOTED OTHERWISE.

2. BOISE CASCADE PRODUCTS SHALL BE INSTALLED PER THE PLANS AND PER THE MANUFACTURER'S RECOMMENDATIONS.

3. CONTRACTOR SHALL BE FAMILIAR WITH TYPICAL FRAMING METHODS AND DETAILS PER BOISE CASCADE SPECIFICATIONS.

REVISION SCHEDULE

REV	DATE	BY

CM Taylor
STRUCTURAL ENGINEERING
C M Taylor Structural Engineering, Inc., 4245 Capitola Rd, Suite 204, Capitola, CA 95010
Phone: 831-854-2484 email: contact@cmtaylorse.com

PLUMAS COUNTY PRE-DESIGNED ADU

BY USING THESE PRE-DESIGNED ADU PLANS, THE RECIPIENT IS ACKNOWLEDGING ACCEPTANCE OF THE FOLLOWING CONDITIONS:
1. THE USE OF THIS INFORMATION IS RESTRICTED TO THE ORIGINAL PROJECT FOR WHICH IT WAS PREPARED (THE PRE-DESIGNED ADU PLANS FOR THE COUNTY OF PLUMAS, CALIFORNIA). USE OF THESE PLANS DOES NOT ELIMINATE OR REDUCE THE RECIPIENT'S RESPONSIBILITY TO VERIFY ANY AND ALL INFORMATION RELEVANT TO THE RECIPIENT'S WORK AND RESPONSIBILITY ON THIS PROJECT. WORKBENCH AND/OR THE COUNTY OF PLUMAS SHALL NOT BE RESPONSIBLE FOR TRANSLATION ERRORS.
2. THE RECIPIENT RECOGNIZES AND ACKNOWLEDGES THAT THE USE OF THIS INFORMATION WILL BE AT THEIR SOLE RISK AND WITHOUT ANY LIABILITY OR LEGAL EXPOSURE TO WORKBENCH OR THE COUNTY OF PLUMAS. NO WARRANTIES OF ANY NATURE, WHETHER EXPRESS OR IMPLIED, SHALL ATTACH TO THESE DOCUMENTS AND THE INFORMATION CONTAINED THEREON. ANY USE, REUSE, OR ALTERATION OF THESE DOCUMENTS BY THE RECIPIENT OR BY OTHERS WILL BE AT THE RECIPIENT'S RISK AND FULL LEGAL RESPONSIBILITY. FURTHERMORE, THE RECIPIENT WILL, TO THE FULLEST EXTENT PERMITTED BY LAW, INDEMNIFY AND HOLD WORKBENCH AND THE COUNTY OF PLUMAS HARMLESS FROM ANY AND ALL CLAIMS, SUITS, LIABILITY, DEMANDS, JUDGEMENTS, OR COSTS ARISING OUT OF OR RESULTING THERE FROM ON ACCOUNT OF ANY INJURY, DEATH, DAMAGE OR LOSS TO PERSONS OR PROPERTY.
3. THE DESIGNS REPRESENTED BY THESE PLANS ARE COPYRIGHTED AND SUBJECT TO COPYRIGHT PROTECTION. IF THE RECIPIENT DOES NOT AGREE WITH THE ABOVE CONDITIONS, THE RECIPIENT SHOULD NOT PROCEED BEYOND THIS DISCLAIMER.

STRUCTURAL NOTES

DATE: 09-25-2023
JOB NO: 23013
SHEET
S0.0

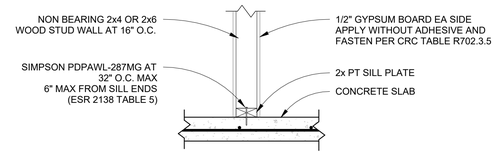

NON BEARING AND NON BRACED/SHEAR INTERIOR WALLS AT CONCRETE SLAB

8 / S0.1 — 1" = 1'-0"

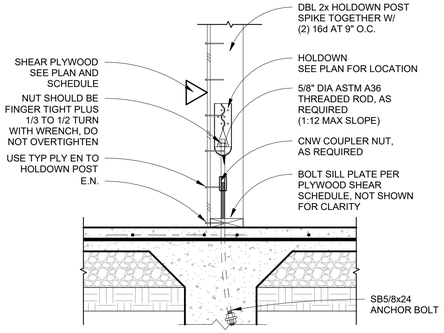

NOTE: FOR ADDITIONAL NOTES NOT SHOWN SEE INTERIOR FOUNDATION DTL 2 / S2.0

TYP HD AT INTERIOR FTG

10 / S0.1 — 1" = 1'-0"

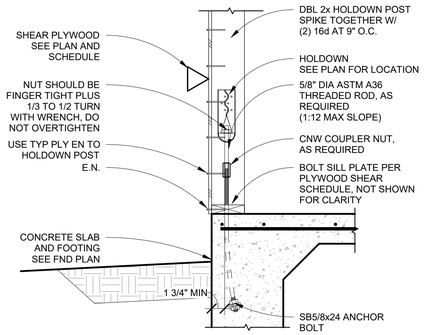

NOTE: FOR ADDITIONAL NOTES NOT SHOWN SEE TYP FND DETAIL 1 / S2.0

TYP HOLDOWN AT PERIM FTG

9 / S0.1 — 1" = 1'-0"

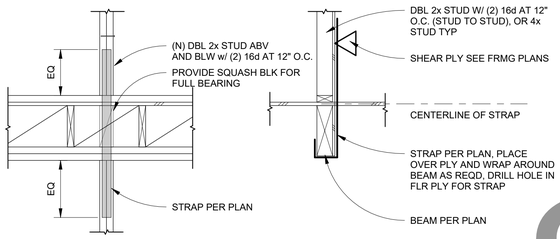

NOTES:
1. PLACE STRAP OVER PLYWOOD SHEATHING.
2. USE TYPICAL EDGE NAILING OF PLYWOOD TO STUD WITH STRAP.

HOLDOWN BETWEEN FLOORS

11 / S0.1 — 3/4" = 1'-0"

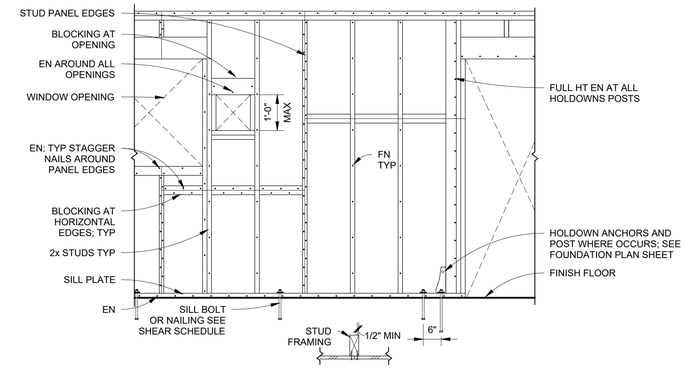

NOTES:

1. INDIVIDUAL PLYWOOD PIECES SHALL NOT BE LESS THAN 2'-0" IN LEAST DIMENSION NOR LESS THAN 8 SQ. FT.
2. (2) SILL BOLTS MINIMUM PER PANEL W/ 4" MIN. AND 8" MAX. FROM EACH END. HOLDOWN ANCHOR BOLT DOES NOTCOUNT AS A SILL BOLT.
3. WHERE NAILS ARE SPACED LESS THAN 4 INCHES ON CENTER, FRAMING MEMBER AND/OR BLOCKING AT ADJOINING PANEL EDGES SHALL BE 3" NOMINAL OR GREATER AND STAGGERED NAILING. OR USE DOUBLE FRAMING MEMBERS THAT ARE AT LEAST 2 " IN NOMINAL THICKNESS.
4. SEE TYP. STUD WALL FRAMING DETAIL FOR INFORMATION NOT SHOWN.
5. SEE PLAN FOR SHEARWALL SCHEDULE.
6. THIS DETAIL REPRESENTS TYP. SHEARWALL CONSTRUCTION. ACTUAL PROJECT CONDITIONS MAY VARY

TYP SHEAR WALL FRAMING

5 / S0.1 — 1/2" = 1'-0"

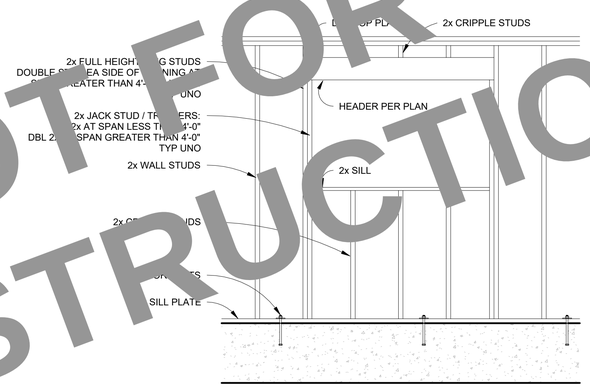

SEE PLAN FOR HEADER SIZE AND NUMBER OF TRIMMERS / KING STUDS

TYP WALL FRAMING

6 / S0.1 — 1/2" = 1'-0"

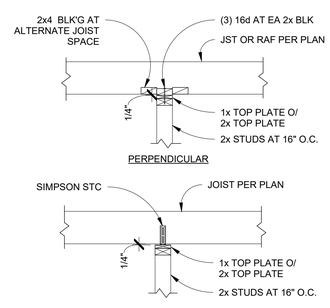

NOTE: DO NOT NAIL TOO TIGHT. ALLOW NAIL TO SLIDE IN CLIP

NON BEARING AND NON BRACED/SHEAR INTERIOR WALLS AT TOP

7 / S0.1 — 3/4" = 1'-0"

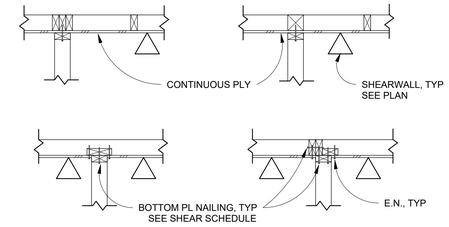

CONT SHEAR WALL PLAN DETAIL

1 / S0.1 — 3/4" = 1'-0"

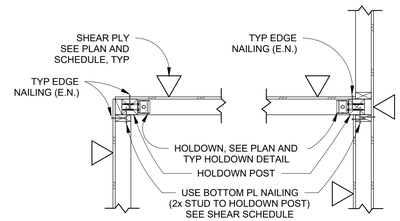

INTERSECTING SHEAR WALL AND HOLDOWN POST DETAIL

2 / S0.1 — 3/4" = 1'-0"

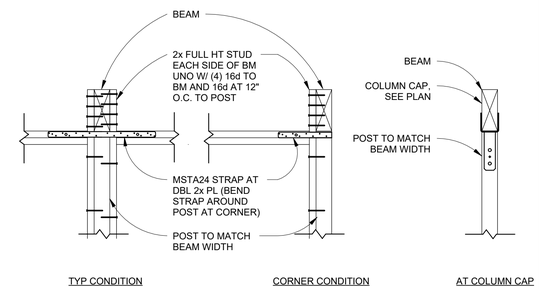

TYPICAL POST TO BEAM CONN

3 / S0.1 — 3/4" = 1'-0"

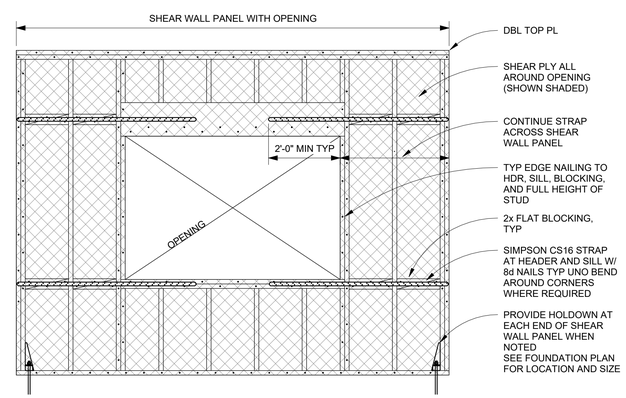

NOTES:
1. PLACE STRAPS OVER PLYWOOD
2. HOLDOWN AT END OF SHEARWALL PANEL MAY NOT BE REQUIRED, SEE FRAMING PLAN

STRAP AROUND OPENING

4 / S0.1 — 1/2" = 1'-0"

NOT FOR CONSTRUCTION

REVISION SCHEDULE

REV	DATE	BY

STRUCTURAL ENGINEERING
CM Taylor
C M Taylor Structural Engineering, Inc. 4245 Capitola Rd, Suite 204, Capitola, CA 95010
Phone: 831-854-2484 email: contact@cmtaylorse.com

PLUMAS COUNTY PRE-DESIGNED ADU

THE INFORMATION, DESIGNS, DRAWINGS, AND SPECIFICATIONS CONTAINED HEREIN ARE THE PROPRIETARY PROPERTY OF C M TAYLOR STRUCTURAL ENGINEERING, INC. (CMTSE) AND ARE PROVIDED FOR USE ONLY BY THE PERSONS OR ENTITY TO WHOM THEY ARE ADDRESSED. ANY REPRODUCTION, IN WHOLE OR IN PART, OR ANY DISTRIBUTION OF THIS DOCUMENT BY ANY PERSON OR ENTITY OTHER THAN THE PERSON OR ENTITY TO WHOM IT IS ADDRESSED IS STRICTLY PROHIBITED WITHOUT THE WRITTEN PERMISSION OF CMTSE. THE PROPERTY RIGHTS OF CMTSE UNDER THE COPYRIGHT LAWS OF THE UNITED STATES OF AMERICA SHALL NOT BE WAIVED BY REASON OF THE DISTRIBUTION OF THE INFORMATION CONTAINED HEREIN.
2. THE PLANS, DESIGNS, DRAWINGS, SPECIFICATIONS, AND THE INFORMATION CONTAINED HEREIN, WHICH ARE PROPERTY OF CMTSE, ARE PROVIDED TO THE COUNTY OF PLUMAS ("COUNTY") AND ALL AFFILIATES, SUBSIDIARIES, AND DIVISIONS OF COUNTY FOR PLUMAS. NO WARRANTIES OF ANY KIND, WHETHER EXPRESS OR IMPLIED, ARE MADE BY CMTSE TO COUNTY OR ANY OTHER PERSON OR ENTITY WHOMSOEVER. COUNTY AND ALL OTHER PERSONS OR ENTITIES ARE PROHIBITED FROM RELYING ON, OR MAKING ANY USE OF, THE PLANS, DESIGNS, DRAWINGS, SPECIFICATIONS, AND THE INFORMATION CONTAINED HEREIN, UNLESS THEY ENTER INTO A WRITTEN AGREEMENT WITH CMTSE. COUNTY AGREES TO INDEMNIFY AND HOLD CMTSE HARMLESS FROM AND ALL CLAIMS, SUITS, LIABILITY, DAMAGES, JUDGEMENTS, OR COSTS ARISING OUT OF COUNTY'S USE OF THE PLANS.
3. THE PLANS, DESIGNS, DRAWINGS, SPECIFICATIONS, AND THE INFORMATION CONTAINED HEREIN ARE PROTECTED BY THE COPYRIGHT LAWS OF THE UNITED STATES OF AMERICA AND SUBJECT TO COPYRIGHT PROTECTION. IF THE RECIPIENT DOES NOT AGREE WITH THE ABOVE CONDITIONS, THE RECIPIENT SHOULD NOT PROCEED BEYOND THIS DISCLAIMER.

TYPICAL DETAILS

DATE:	09-25-2023
JOB NO:	23013
SHEET	S0.1

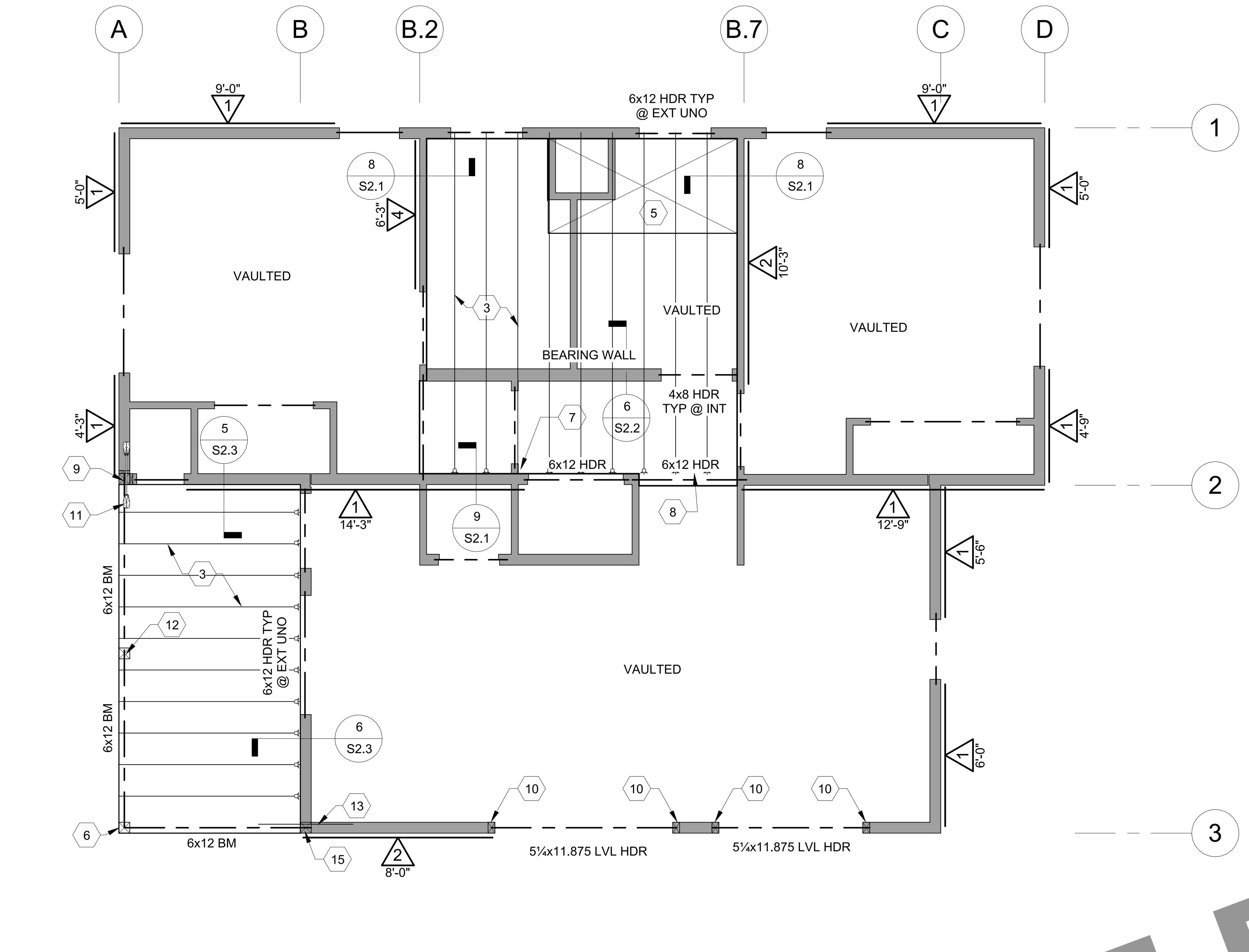

TYPE C TWO BEDROOM CEILING FRAMING PLAN

1/4" = 1'-0"

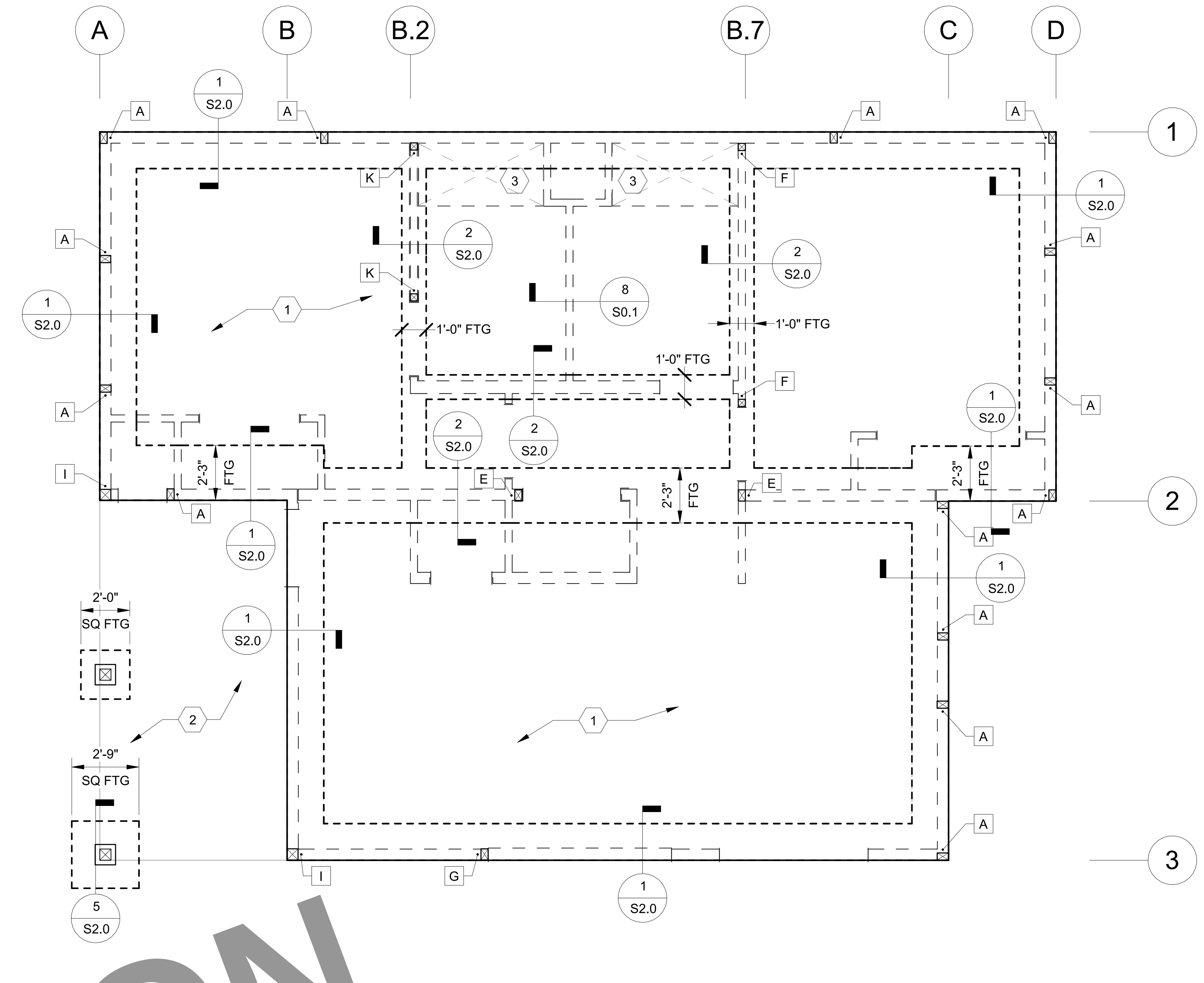

TYPE C TWO BEDROOM FOUNDATION PLAN

1/4" = 1'-0"

LEGEND

- KEYNOTE TAG, SEE KEYNOTE
- TAG, SEE HOLDOWN SCHEDULE
- SHEARWALL TAG
- PERFORATED SHEARWALL, SEE DETAIL 4 / S0.1
- HOLDOWN POST
- WALL ABOVE
- WALL BELOW

NOT FOR CONSTRUCTION

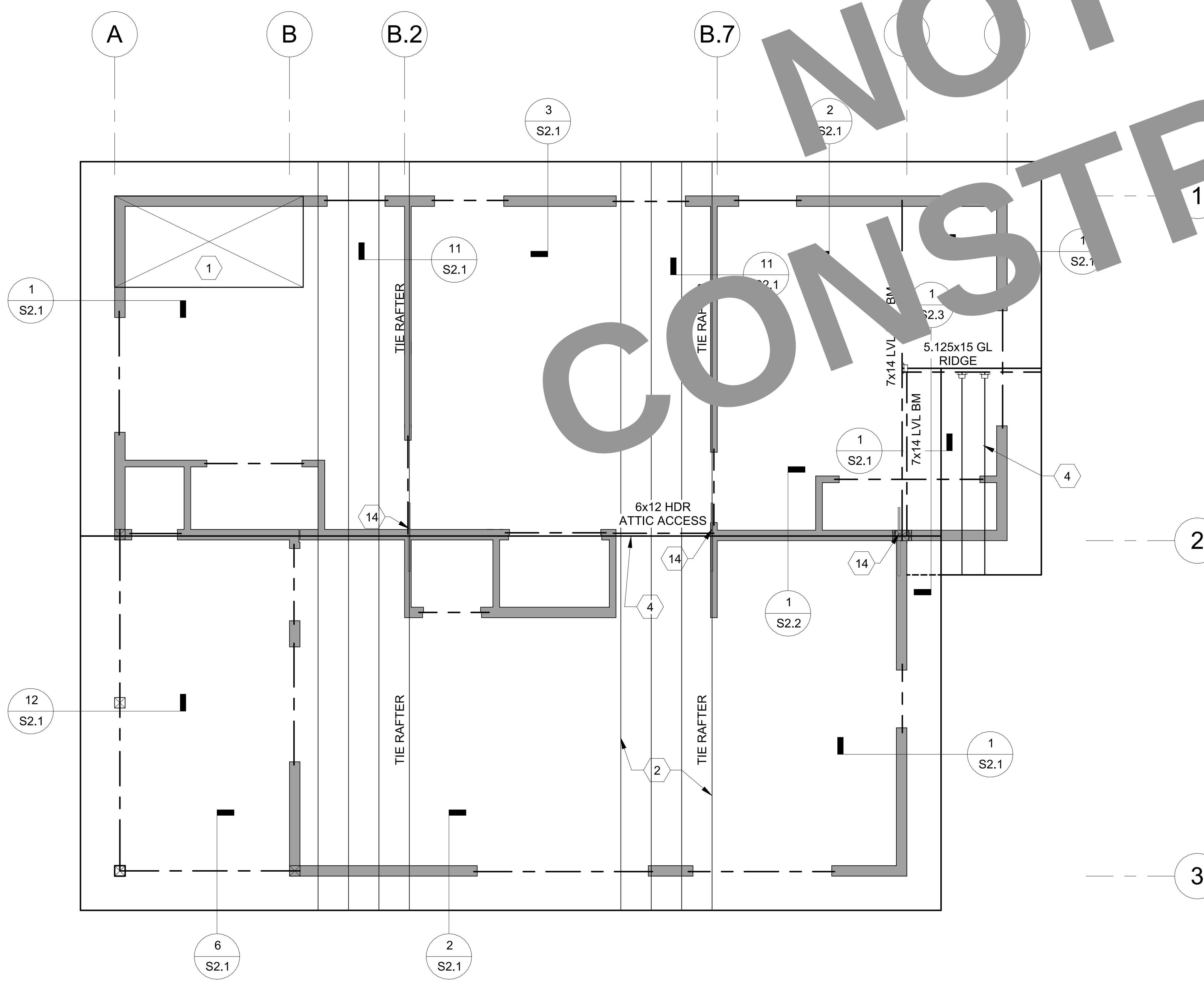

TYPE C TWO BEDROOM ROOF FRAMING PLAN

1/4" = 1'-0"

ROOF AND CEILING/LOFT FRAMING NOTES

1. SEE STRUCTURAL NOTES SHEET S0.0, TYPICAL FRAMING DETAILS SHEET S0.1 AND FOUNDATION NOTES.
2. ROOF PLYWOOD SHALL BE 19/32" APA RATED SHEATHING C-D GRADE OR BETTER WITH PANEL SPAN RATING OF 40/20 FASTEN WITH 10d AT 6" O.C. EDGE NAILING (E.N.) AND BOUNDARY NAILING (B.N.) AND 12" O.C. AT INTERMEDIATE SUPPORTS (F.N.) PLACE PLYWOOD PANELS WITH FACE GRAIN PERPENDICULAR TO SUPPORTS AND STAGGER END PANEL JOINTS.
3. ALL "TIE" RAFTERS AND JOISTS TO HAVE EDGE NAILING (E.N.) FROM ROOF PLYWOOD TO RAFTER.
4. SHEAR WALLS ARE INDICATED BY (X, 4'-0" MIN) ETC. ON THE FRAMING PLANS. SEE PLYWOOD SHEAR SCHEDULE.
5. UNLESS NOTED OTHERWISE, ALL EXTERIOR WALLS SHALL BE SHEAR WALL TYPE (1.)
6. FLOOR/CEILING PLYWOOD SHALL BE 23/32" OR THICKER APA SHEATHING, C-D GRADE OR BETTER WITH PANEL SPAN RATING OF 48/24. FASTEN WITH 10d AT 6" O.C. EDGE NAILING (E.N.) AND BOUNDARY NAILING (B.N.) AT 10" O.C. AT INTERMEDIATE SUPPORTS (F.N.). PLACE PLYWOOD PANELS WITH FACE GRAIN PERPENDICULAR TO SUPPORTS.

TYPE C TWO BEDROOM ROOF & CEILING FRAMING PLAN KEYNOTES

NOTE NUMBER	NOTE TEXT
1	ROOF PLYWOOD, SEE ROOF FRAMING AND CEILING/LOFT FRAMING NOTES
2	1.75x14 LVL RAFTERS AT 16" O.C.
3	2x8 CEILING JOIST AT 16" O.C. W/ LUS28 HANGERS
4	1.75x14 RAFTERS AT 16" O.C. WITH HUS1.81/10 HANGER
4	LOFT/ATTIC ACCESS DOOR VERIFY SEE ARCH DWGS FOR LOCATION
5	CEILING PLYWOOD SEE ROOF AND CEILING FRAMING NOTES
6	6x6 POST WITH ECCLL POST CAP
7	FULL HEIGHT WALLS
8	LOFT/ATTIC ACCESS DOOR ABOVE ACCESS VERIFY SEE ARCH DWGS
9	6x6 No.1 POST BM POCKET WITH FULL HEIGHT 2x6 STUDS BOTH SIDES
10	4x6 No.1 POST WITH EPC6Z POST CAP
11	DTT2Z WITH 1/2" DIAMETER TR FROM 4x6 BLK'G IN WALL TO TOP OF BEAM
12	6x6 POST WITH CC66 POST CAP
13	CS16 STRAP x60" LONG FROM TOP OF BM TO DBL TOP PLATE
14	MSTA30 STRAP FROM TIE RAF OVER RIDGE TO RIE RAFTER SEE DETAIL 3/S2.1
15	6x6 No.1 POST BM POCKET NOTCH 6x BM 3" UNDER DBL TOP PLATE

FOUNDATION PLAN NOTES

1. SEE STRUCTURAL NOTES SHEET S0.0 AND TYPICAL FRAMING DETAILS SHEETS S0.1.
2. DIMENSIONS ARE TO FACE OF CONCRETE, CENTERLINE FOOTING AND POSTS, ETC., UNLESS NOTED OTHERWISE. NOTIFY ARCHITECT OF ANY DISCREPANCIES. VERIFY ALL DIMENSIONS WITH ARCHITECT'S PLANS BEFORE BEGINNING WORK.
3. HDU2 ETC., SPECIFIES MODEL NUMBER OF FRAMING CONNECTORS MANUFACTURED BY SIMPSON STRONG-TIE AND INSTALLED PER MANUFACTURER'S RECOMMENDATIONS AND THESE DRAWINGS.
4. ☒• INDICATES HOLDOWN AND POST, SEE FOUNDATION AND FRAMING PLANS FOR SIZE AND LOCATION AND TYPICAL DETAIL SHEET S0.1.
5. CONTRACTOR MAY USE CRACK CONTROL JOINTS IN CONCRETE SLAB TO CONTROL CRACKING. JOINTS SHALL BE SPACED NO FURTHER APART THAN 12 FEET ON CENTER AND HAVE A MIN. DEPTH EQUAL TO 1/3 THE SLAB THICKNESS. JOINTS MAY BE TOOLED OR SAWCUT. SAWCUT JOINTS SHALL BE PLACED AS SOON AS POSSIBLE AFTER FINISHING SLAB.

TYPE C TWO BEDROOM FOUNDATION PLAN KEYNOTES

NOTE NUMBER	NOTE TEXT
1	4" CONC. SLAB W/ #4 BARS AT 16" O.C. EA WAY, AT CENTER OF SLAB, OVER 15 MIL VAPOR BARRIER, OVER 4" CLEAN 3/4" DIA. CRUSHED ROCK, TYP.
2	ARCHITECTURAL PATIO CONCRETE SLAB ON GRADE, NON STRUCTURAL
3	OPTIONAL CONCRETE SLAB DEPRESSION (1-1/2" MAX) SAD

HOLDOWN SCHEDULE

MARK	HOLDOWN MODEL	POST SIZE	ANCHOR TYPE	DETAIL
A	HDU2	DBL 2x6	SB5/8x24	9/S0.1
B	HDU4	DBL 2x6	SB5/8x24	9/S0.1
C	HDU5	DBL 2x6	SB5/8x24	9/S0.1
D	HDU5	DBL 2x6	SB5/8x24	10/S0.1
E	HDU2	DBL 2x6	SB5/8x24	10/S0.1
F	HDU2	DBL 2x4	SB5/8x24	10/S0.1
G	HDU2	4x6	SB5/8x24	9/S0.1
H	HDU4	6x6	SB5/8x24	9/S0.1
I	HDU2	6x6	SB5/8x24	9/S0.1
J	HDU2	6x6	SB5/8x24	10/S0.1
K	HDU4	DBL 2x4	SB5/8x24	10/S0.1

REVISION SCHEDULE

REV	DATE	BY

CM Taylor
STRUCTURAL ENGINEERING
C M Taylor Structural Engineering, Inc. 4245 Capitola Rd. Suite 204, Capitola, CA 95010
Phone: 831-854-2484 email: contact@cmtaylorse.com

PLUMAS COUNTY PRE-DESIGNED ADU

TYPE C TWO BEDROOM ROOF/CEILING FRAMING AND FOUNDATION PLAN

DATE: 09-25-2023

JOB NO: 23013

SHEET S1.0C

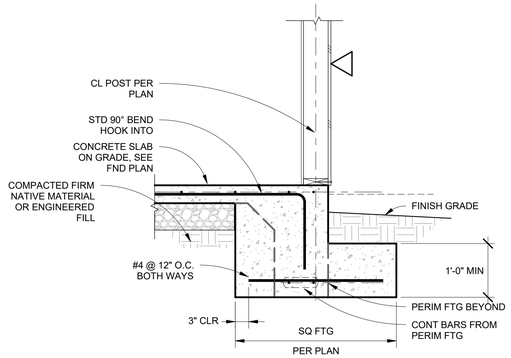

NOTE: FOR NOTES NOT SHOWN SEE DETAIL 1 / S2.0

4 / S2.0 WIDEN FTG AT POST

3/4" = 1'-0"

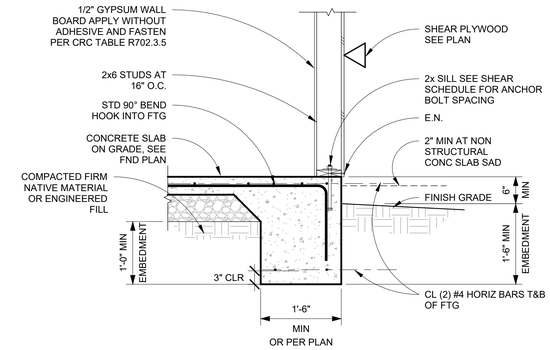

1 / S2.0 TYP PERIMETER FTG

3/4" = 1'-0"

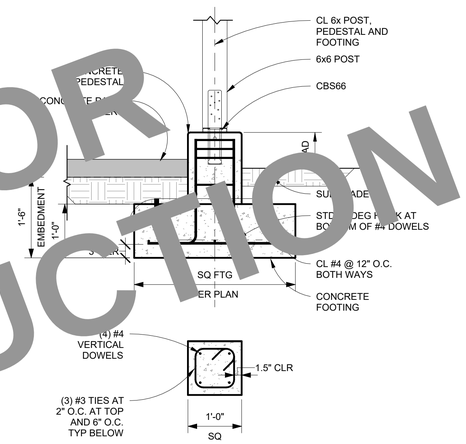

5 / S2.0 COVERED PORCH POST FTG

3/4" = 1'-0"

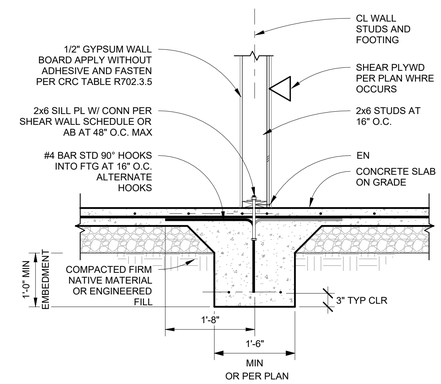

2 / S2.0 INTERIOR FOOTING

3/4" = 1'-0"

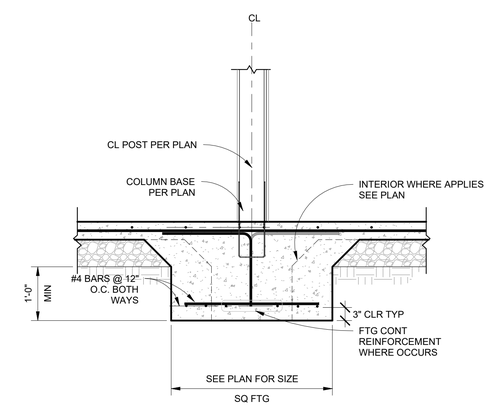

NOTE: FOR NOTES NOT SHOW SEE DTL 2 / S2.0

3 / S2.0 INTERIOR PAD FOOTING

3/4" = 1'-0"

NOT FOR CONSTRUCTION

REVISION SCHEDULE

REV	DATE	BY

STRUCTURAL ENGINEERING
CM Taylor
C M Taylor Structural Engineering, Inc. 4245 Capitola Rd, Suite 204, Capitola, CA 95010
Phone: 831-854-2484 email: contact@cmtaylorse.com

PLUMAS COUNTY PRE-DESIGNED ADU

THIS DOCUMENT, AND THE INFORMATION CONTAINED HEREIN, IS THE PROPERTY OF PLUMAS COUNTY. USE OF THESE PLANS, OR ANY PART THEREOF, FOR ANY PURPOSE OTHER THAN THE CONSTRUCTION OF A PLUMAS COUNTY PRE-DESIGNED ADU ON THE SITE SPECIFIED IN THE PLANS IS PROHIBITED WITHOUT THE WRITTEN PERMISSION OF PLUMAS COUNTY. THE PLUMAS COUNTY PRE-DESIGNED ADU PROGRAM IS INTENDED TO SUPPORT THE CONSTRUCTION OF ADDITIONAL DWELLING UNITS ON PRIVATE PROPERTIES IN PLUMAS COUNTY. PLUMAS COUNTY MAKES NO REPRESENTATION OR WARRANTY OF ANY KIND, WHETHER EXPRESS OR IMPLIED, REGARDING THE SUITABILITY OF THE PLANS FOR ANY PURPOSE OTHER THAN THE CONSTRUCTION OF A PLUMAS COUNTY PRE-DESIGNED ADU ON THE SITE SPECIFIED IN THE PLANS. PLUMAS COUNTY DISCLAIMS ANY AND ALL LIABILITY FOR ANY USE OF THE PLANS OTHER THAN THE CONSTRUCTION OF A PLUMAS COUNTY PRE-DESIGNED ADU ON THE SITE SPECIFIED IN THE PLANS. PLUMAS COUNTY MAKES NO REPRESENTATION OR WARRANTY OF ANY NATURE, WHETHER EXPRESS OR IMPLIED, REGARDING THE SUITABILITY OF THE PLANS FOR ANY PURPOSE. THE RECIPIENT OF THE PLANS IS SOLELY RESPONSIBLE FOR THE SUITABILITY OF THE PLANS FOR THE INTENDED USE. THE RECIPIENT OF THE PLANS AGREES TO INDEMNIFY AND HOLD PLUMAS COUNTY HARMLESS FROM ANY AND ALL CLAIMS, SUITS, LIABILITY, DAMAGES, JUDGEMENTS, OR COSTS ARISING OUT OF THE USE OF THE PLANS BY THE RECIPIENT.
2. THE PLANS ARE PROVIDED AS A SERVICE TO THE PUBLIC. PLUMAS COUNTY MAKES NO REPRESENTATION OR WARRANTY OF ANY NATURE, WHETHER EXPRESS OR IMPLIED, REGARDING THE SUITABILITY OF THE PLANS FOR ANY PURPOSE. THE RECIPIENT OF THE PLANS IS SOLELY RESPONSIBLE FOR THE SUITABILITY OF THE PLANS FOR THE INTENDED USE.
3. THE PLANS ARE PROVIDED AS A SERVICE TO THE PUBLIC. PLUMAS COUNTY MAKES NO REPRESENTATION OR WARRANTY OF ANY NATURE, WHETHER EXPRESS OR IMPLIED, REGARDING THE SUITABILITY OF THE PLANS FOR ANY PURPOSE. THE RECIPIENT OF THE PLANS IS SOLELY RESPONSIBLE FOR THE SUITABILITY OF THE PLANS FOR THE INTENDED USE.
4. THE PLANS ARE PROVIDED AS A SERVICE TO THE PUBLIC. PLUMAS COUNTY MAKES NO REPRESENTATION OR WARRANTY OF ANY NATURE, WHETHER EXPRESS OR IMPLIED, REGARDING THE SUITABILITY OF THE PLANS FOR ANY PURPOSE. THE RECIPIENT OF THE PLANS IS SOLELY RESPONSIBLE FOR THE SUITABILITY OF THE PLANS FOR THE INTENDED USE.
5. THE PLANS ARE PROVIDED AS A SERVICE TO THE PUBLIC. PLUMAS COUNTY MAKES NO REPRESENTATION OR WARRANTY OF ANY NATURE, WHETHER EXPRESS OR IMPLIED, REGARDING THE SUITABILITY OF THE PLANS FOR ANY PURPOSE. THE RECIPIENT OF THE PLANS IS SOLELY RESPONSIBLE FOR THE SUITABILITY OF THE PLANS FOR THE INTENDED USE.
6. THE PLANS ARE PROVIDED AS A SERVICE TO THE PUBLIC. PLUMAS COUNTY MAKES NO REPRESENTATION OR WARRANTY OF ANY NATURE, WHETHER EXPRESS OR IMPLIED, REGARDING THE SUITABILITY OF THE PLANS FOR ANY PURPOSE. THE RECIPIENT OF THE PLANS IS SOLELY RESPONSIBLE FOR THE SUITABILITY OF THE PLANS FOR THE INTENDED USE.
7. THE PLANS ARE PROVIDED AS A SERVICE TO THE PUBLIC. PLUMAS COUNTY MAKES NO REPRESENTATION OR WARRANTY OF ANY NATURE, WHETHER EXPRESS OR IMPLIED, REGARDING THE SUITABILITY OF THE PLANS FOR ANY PURPOSE. THE RECIPIENT OF THE PLANS IS SOLELY RESPONSIBLE FOR THE SUITABILITY OF THE PLANS FOR THE INTENDED USE.
8. THE PLANS ARE PROVIDED AS A SERVICE TO THE PUBLIC. PLUMAS COUNTY MAKES NO REPRESENTATION OR WARRANTY OF ANY NATURE, WHETHER EXPRESS OR IMPLIED, REGARDING THE SUITABILITY OF THE PLANS FOR ANY PURPOSE. THE RECIPIENT OF THE PLANS IS SOLELY RESPONSIBLE FOR THE SUITABILITY OF THE PLANS FOR THE INTENDED USE.
9. THE PLANS ARE PROVIDED AS A SERVICE TO THE PUBLIC. PLUMAS COUNTY MAKES NO REPRESENTATION OR WARRANTY OF ANY NATURE, WHETHER EXPRESS OR IMPLIED, REGARDING THE SUITABILITY OF THE PLANS FOR ANY PURPOSE. THE RECIPIENT OF THE PLANS IS SOLELY RESPONSIBLE FOR THE SUITABILITY OF THE PLANS FOR THE INTENDED USE.
10. THE PLANS ARE PROVIDED AS A SERVICE TO THE PUBLIC. PLUMAS COUNTY MAKES NO REPRESENTATION OR WARRANTY OF ANY NATURE, WHETHER EXPRESS OR IMPLIED, REGARDING THE SUITABILITY OF THE PLANS FOR ANY PURPOSE. THE RECIPIENT OF THE PLANS IS SOLELY RESPONSIBLE FOR THE SUITABILITY OF THE PLANS FOR THE INTENDED USE.
11. THE PLANS ARE PROVIDED AS A SERVICE TO THE PUBLIC. PLUMAS COUNTY MAKES NO REPRESENTATION OR WARRANTY OF ANY NATURE, WHETHER EXPRESS OR IMPLIED, REGARDING THE SUITABILITY OF THE PLANS FOR ANY PURPOSE. THE RECIPIENT OF THE PLANS IS SOLELY RESPONSIBLE FOR THE SUITABILITY OF THE PLANS FOR THE INTENDED USE.
12. THE PLANS ARE PROVIDED AS A SERVICE TO THE PUBLIC. PLUMAS COUNTY MAKES NO REPRESENTATION OR WARRANTY OF ANY NATURE, WHETHER EXPRESS OR IMPLIED, REGARDING THE SUITABILITY OF THE PLANS FOR ANY PURPOSE. THE RECIPIENT OF THE PLANS IS SOLELY RESPONSIBLE FOR THE SUITABILITY OF THE PLANS FOR THE INTENDED USE.
13. THE PLANS ARE PROVIDED AS A SERVICE TO THE PUBLIC. PLUMAS COUNTY MAKES NO REPRESENTATION OR WARRANTY OF ANY NATURE, WHETHER EXPRESS OR IMPLIED, REGARDING THE SUITABILITY OF THE PLANS FOR ANY PURPOSE. THE RECIPIENT OF THE PLANS IS SOLELY RESPONSIBLE FOR THE SUITABILITY OF THE PLANS FOR THE INTENDED USE.
14. THE PLANS ARE PROVIDED AS A SERVICE TO THE PUBLIC. PLUMAS COUNTY MAKES NO REPRESENTATION OR WARRANTY OF ANY NATURE, WHETHER EXPRESS OR IMPLIED, REGARDING THE SUITABILITY OF THE PLANS FOR ANY PURPOSE. THE RECIPIENT OF THE PLANS IS SOLELY RESPONSIBLE FOR THE SUITABILITY OF THE PLANS FOR THE INTENDED USE.
15. THE PLANS ARE PROVIDED AS A SERVICE TO THE PUBLIC. PLUMAS COUNTY MAKES NO REPRESENTATION OR WARRANTY OF ANY NATURE, WHETHER EXPRESS OR IMPLIED, REGARDING THE SUITABILITY OF THE PLANS FOR ANY PURPOSE. THE RECIPIENT OF THE PLANS IS SOLELY RESPONSIBLE FOR THE SUITABILITY OF THE PLANS FOR THE INTENDED USE.
16. THE PLANS ARE PROVIDED AS A SERVICE TO THE PUBLIC. PLUMAS COUNTY MAKES NO REPRESENTATION OR WARRANTY OF ANY NATURE, WHETHER EXPRESS OR IMPLIED, REGARDING THE SUITABILITY OF THE PLANS FOR ANY PURPOSE. THE RECIPIENT OF THE PLANS IS SOLELY RESPONSIBLE FOR THE SUITABILITY OF THE PLANS FOR THE INTENDED USE.
17. THE PLANS ARE PROVIDED AS A SERVICE TO THE PUBLIC. PLUMAS COUNTY MAKES NO REPRESENTATION OR WARRANTY OF ANY NATURE, WHETHER EXPRESS OR IMPLIED, REGARDING THE SUITABILITY OF THE PLANS FOR ANY PURPOSE. THE RECIPIENT OF THE PLANS IS SOLELY RESPONSIBLE FOR THE SUITABILITY OF THE PLANS FOR THE INTENDED USE.
18. THE PLANS ARE PROVIDED AS A SERVICE TO THE PUBLIC. PLUMAS COUNTY MAKES NO REPRESENTATION OR WARRANTY OF ANY NATURE, WHETHER EXPRESS OR IMPLIED, REGARDING THE SUITABILITY OF THE PLANS FOR ANY PURPOSE. THE RECIPIENT OF THE PLANS IS SOLELY RESPONSIBLE FOR THE SUITABILITY OF THE PLANS FOR THE INTENDED USE.
19. THE PLANS ARE PROVIDED AS A SERVICE TO THE PUBLIC. PLUMAS COUNTY MAKES NO REPRESENTATION OR WARRANTY OF ANY NATURE, WHETHER EXPRESS OR IMPLIED, REGARDING THE SUITABILITY OF THE PLANS FOR ANY PURPOSE. THE RECIPIENT OF THE PLANS IS SOLELY RESPONSIBLE FOR THE SUITABILITY OF THE PLANS FOR THE INTENDED USE.
20. THE PLANS ARE PROVIDED AS A SERVICE TO THE PUBLIC. PLUMAS COUNTY MAKES NO REPRESENTATION OR WARRANTY OF ANY NATURE, WHETHER EXPRESS OR IMPLIED, REGARDING THE SUITABILITY OF THE PLANS FOR ANY PURPOSE. THE RECIPIENT OF THE PLANS IS SOLELY RESPONSIBLE FOR THE SUITABILITY OF THE PLANS FOR THE INTENDED USE.
21. THE PLANS ARE PROVIDED AS A SERVICE TO THE PUBLIC. PLUMAS COUNTY MAKES NO REPRESENTATION OR WARRANTY OF ANY NATURE, WHETHER EXPRESS OR IMPLIED, REGARDING THE SUITABILITY OF THE PLANS FOR ANY PURPOSE. THE RECIPIENT OF THE PLANS IS SOLELY RESPONSIBLE FOR THE SUITABILITY OF THE PLANS FOR THE INTENDED USE.
22. THE PLANS ARE PROVIDED AS A SERVICE TO THE PUBLIC. PLUMAS COUNTY MAKES NO REPRESENTATION OR WARRANTY OF ANY NATURE, WHETHER EXPRESS OR IMPLIED, REGARDING THE SUITABILITY OF THE PLANS FOR ANY PURPOSE. THE RECIPIENT OF THE PLANS IS SOLELY RESPONSIBLE FOR THE SUITABILITY OF THE PLANS FOR THE INTENDED USE.
23. THE PLANS ARE PROVIDED AS A SERVICE TO THE PUBLIC. PLUMAS COUNTY MAKES NO REPRESENTATION OR WARRANTY OF ANY NATURE, WHETHER EXPRESS OR IMPLIED, REGARDING THE SUITABILITY OF THE PLANS FOR ANY PURPOSE. THE RECIPIENT OF THE PLANS IS SOLELY RESPONSIBLE FOR THE SUITABILITY OF THE PLANS FOR THE INTENDED USE.
24. THE PLANS ARE PROVIDED AS A SERVICE TO THE PUBLIC. PLUMAS COUNTY MAKES NO REPRESENTATION OR WARRANTY OF ANY NATURE, WHETHER EXPRESS OR IMPLIED, REGARDING THE SUITABILITY OF THE PLANS FOR ANY PURPOSE. THE RECIPIENT OF THE PLANS IS SOLELY RESPONSIBLE FOR THE SUITABILITY OF THE PLANS FOR THE INTENDED USE.
25. THE PLANS ARE PROVIDED AS A SERVICE TO THE PUBLIC. PLUMAS COUNTY MAKES NO REPRESENTATION OR WARRANTY OF ANY NATURE, WHETHER EXPRESS OR IMPLIED, REGARDING THE SUITABILITY OF THE PLANS FOR ANY PURPOSE. THE RECIPIENT OF THE PLANS IS SOLELY RESPONSIBLE FOR THE SUITABILITY OF THE PLANS FOR THE INTENDED USE.
26. THE PLANS ARE PROVIDED AS A SERVICE TO THE PUBLIC. PLUMAS COUNTY MAKES NO REPRESENTATION OR WARRANTY OF ANY NATURE, WHETHER EXPRESS OR IMPLIED, REGARDING THE SUITABILITY OF THE PLANS FOR ANY PURPOSE. THE RECIPIENT OF THE PLANS IS SOLELY RESPONSIBLE FOR THE SUITABILITY OF THE PLANS FOR THE INTENDED USE.
27. THE PLANS ARE PROVIDED AS A SERVICE TO THE PUBLIC. PLUMAS COUNTY MAKES NO REPRESENTATION OR WARRANTY OF ANY NATURE, WHETHER EXPRESS OR IMPLIED, REGARDING THE SUITABILITY OF THE PLANS FOR ANY PURPOSE. THE RECIPIENT OF THE PLANS IS SOLELY RESPONSIBLE FOR THE SUITABILITY OF THE PLANS FOR THE INTENDED USE.
28. THE PLANS ARE PROVIDED AS A SERVICE TO THE PUBLIC. PLUMAS COUNTY MAKES NO REPRESENTATION OR WARRANTY OF ANY NATURE, WHETHER EXPRESS OR IMPLIED, REGARDING THE SUITABILITY OF THE PLANS FOR ANY PURPOSE. THE RECIPIENT OF THE PLANS IS SOLELY RESPONSIBLE FOR THE SUITABILITY OF THE PLANS FOR THE INTENDED USE.
29. THE PLANS ARE PROVIDED AS A SERVICE TO THE PUBLIC. PLUMAS COUNTY MAKES NO REPRESENTATION OR WARRANTY OF ANY NATURE, WHETHER EXPRESS OR IMPLIED, REGARDING THE SUITABILITY OF THE PLANS FOR ANY PURPOSE. THE RECIPIENT OF THE PLANS IS SOLELY RESPONSIBLE FOR THE SUITABILITY OF THE PLANS FOR THE INTENDED USE.
30. THE PLANS ARE PROVIDED AS A SERVICE TO THE PUBLIC. PLUMAS COUNTY MAKES NO REPRESENTATION OR WARRANTY OF ANY NATURE, WHETHER EXPRESS OR IMPLIED, REGARDING THE SUITABILITY OF THE PLANS FOR ANY PURPOSE. THE RECIPIENT OF THE PLANS IS SOLELY RESPONSIBLE FOR THE SUITABILITY OF THE PLANS FOR THE INTENDED USE.
31. THE PLANS ARE PROVIDED AS A SERVICE TO THE PUBLIC. PLUMAS COUNTY MAKES NO REPRESENTATION OR WARRANTY OF ANY NATURE, WHETHER EXPRESS OR IMPLIED, REGARDING THE SUITABILITY OF THE PLANS FOR ANY PURPOSE. THE RECIPIENT OF THE PLANS IS SOLELY RESPONSIBLE FOR THE SUITABILITY OF THE PLANS FOR THE INTENDED USE.
32. THE PLANS ARE PROVIDED AS A SERVICE TO THE PUBLIC. PLUMAS COUNTY MAKES NO REPRESENTATION OR WARRANTY OF ANY NATURE, WHETHER EXPRESS OR IMPLIED, REGARDING THE SUITABILITY OF THE PLANS FOR ANY PURPOSE. THE RECIPIENT OF THE PLANS IS SOLELY RESPONSIBLE FOR THE SUITABILITY OF THE PLANS FOR THE INTENDED USE.
33. THE PLANS ARE PROVIDED AS A SERVICE TO THE PUBLIC. PLUMAS COUNTY MAKES NO REPRESENTATION OR WARRANTY OF ANY NATURE, WHETHER EXPRESS OR IMPLIED, REGARDING THE SUITABILITY OF THE PLANS FOR ANY PURPOSE. THE RECIPIENT OF THE PLANS IS SOLELY RESPONSIBLE FOR THE SUITABILITY OF THE PLANS FOR THE INTENDED USE.
34. THE PLANS ARE PROVIDED AS A SERVICE TO THE PUBLIC. PLUMAS COUNTY MAKES NO REPRESENTATION OR WARRANTY OF ANY NATURE, WHETHER EXPRESS OR IMPLIED, REGARDING THE SUITABILITY OF THE PLANS FOR ANY PURPOSE. THE RECIPIENT OF THE PLANS IS SOLELY RESPONSIBLE FOR THE SUITABILITY OF THE PLANS FOR THE INTENDED USE.
35. THE PLANS ARE PROVIDED AS A SERVICE TO THE PUBLIC. PLUMAS COUNTY MAKES NO REPRESENTATION OR WARRANTY OF ANY NATURE, WHETHER EXPRESS OR IMPLIED, REGARDING THE SUITABILITY OF THE PLANS FOR ANY PURPOSE. THE RECIPIENT OF THE PLANS IS SOLELY RESPONSIBLE FOR THE SUITABILITY OF THE PLANS FOR THE INTENDED USE.
36. THE PLANS ARE PROVIDED AS A SERVICE TO THE PUBLIC. PLUMAS COUNTY MAKES NO REPRESENTATION OR WARRANTY OF ANY NATURE, WHETHER EXPRESS OR IMPLIED, REGARDING THE SUITABILITY OF THE PLANS FOR ANY PURPOSE. THE RECIPIENT OF THE PLANS IS SOLELY RESPONSIBLE FOR THE SUITABILITY OF THE PLANS FOR THE INTENDED USE.
37. THE PLANS ARE PROVIDED AS A SERVICE TO THE PUBLIC. PLUMAS COUNTY MAKES NO REPRESENTATION OR WARRANTY OF ANY NATURE, WHETHER EXPRESS OR IMPLIED, REGARDING THE SUITABILITY OF THE PLANS FOR ANY PURPOSE. THE RECIPIENT OF THE PLANS IS SOLELY RESPONSIBLE FOR THE SUITABILITY OF THE PLANS FOR THE INTENDED USE.
38. THE PLANS ARE PROVIDED AS A SERVICE TO THE PUBLIC. PLUMAS COUNTY MAKES NO REPRESENTATION OR WARRANTY OF ANY NATURE, WHETHER EXPRESS OR IMPLIED, REGARDING THE SUITABILITY OF THE PLANS FOR ANY PURPOSE. THE RECIPIENT OF THE PLANS IS SOLELY RESPONSIBLE FOR THE SUITABILITY OF THE PLANS FOR THE INTENDED USE.
39. THE PLANS ARE PROVIDED AS A SERVICE TO THE PUBLIC. PLUMAS COUNTY MAKES NO REPRESENTATION OR WARRANTY OF ANY NATURE, WHETHER EXPRESS OR IMPLIED, REGARDING THE SUITABILITY OF THE PLANS FOR ANY PURPOSE. THE RECIPIENT OF THE PLANS IS SOLELY RESPONSIBLE FOR THE SUITABILITY OF THE PLANS FOR THE INTENDED USE.
40. THE PLANS ARE PROVIDED AS A SERVICE TO THE PUBLIC. PLUMAS COUNTY MAKES NO REPRESENTATION OR WARRANTY OF ANY NATURE, WHETHER EXPRESS OR IMPLIED, REGARDING THE SUITABILITY OF THE PLANS FOR ANY PURPOSE. THE RECIPIENT OF THE PLANS IS SOLELY RESPONSIBLE FOR THE SUITABILITY OF THE PLANS FOR THE INTENDED USE.
41. THE PLANS ARE PROVIDED AS A SERVICE TO THE PUBLIC. PLUMAS COUNTY MAKES NO REPRESENTATION OR WARRANTY OF ANY NATURE, WHETHER EXPRESS OR IMPLIED, REGARDING THE SUITABILITY OF THE PLANS FOR ANY PURPOSE. THE RECIPIENT OF THE PLANS IS SOLELY RESPONSIBLE FOR THE SUITABILITY OF THE PLANS FOR THE INTENDED USE.
42. THE PLANS ARE PROVIDED AS A SERVICE TO THE PUBLIC. PLUMAS COUNTY MAKES NO REPRESENTATION OR WARRANTY OF ANY NATURE, WHETHER EXPRESS OR IMPLIED, REGARDING THE SUITABILITY OF THE PLANS FOR ANY PURPOSE. THE RECIPIENT OF THE PLANS IS SOLELY RESPONSIBLE FOR THE SUITABILITY OF THE PLANS FOR THE INTENDED USE.
43. THE PLANS ARE PROVIDED AS A SERVICE TO THE PUBLIC. PLUMAS COUNTY MAKES NO REPRESENTATION OR WARRANTY OF ANY NATURE, WHETHER EXPRESS OR IMPLIED, REGARDING THE SUITABILITY OF THE PLANS FOR ANY PURPOSE. THE RECIPIENT OF THE PLANS IS SOLELY RESPONSIBLE FOR THE SUITABILITY OF THE PLANS FOR THE INTENDED USE.
44. THE PLANS ARE PROVIDED AS A SERVICE TO THE PUBLIC. PLUMAS COUNTY MAKES NO REPRESENTATION OR WARRANTY OF ANY NATURE, WHETHER EXPRESS OR IMPLIED, REGARDING THE SUITABILITY OF THE PLANS FOR ANY PURPOSE. THE RECIPIENT OF THE PLANS IS SOLELY RESPONSIBLE FOR THE SUITABILITY OF THE PLANS FOR THE INTENDED USE.
45. THE PLANS ARE PROVIDED AS A SERVICE TO THE PUBLIC. PLUMAS COUNTY MAKES NO REPRESENTATION OR WARRANTY OF ANY NATURE, WHETHER EXPRESS OR IMPLIED, REGARDING THE SUITABILITY OF THE PLANS FOR ANY PURPOSE. THE RECIPIENT OF THE PLANS IS SOLELY RESPONSIBLE FOR THE SUITABILITY OF THE PLANS FOR THE INTENDED USE.
46. THE PLANS ARE PROVIDED AS A SERVICE TO THE PUBLIC. PLUMAS COUNTY MAKES NO REPRESENTATION OR WARRANTY OF ANY NATURE, WHETHER EXPRESS OR IMPLIED, REGARDING THE SUITABILITY OF THE PLANS FOR ANY PURPOSE. THE RECIPIENT OF THE PLANS IS SOLELY RESPONSIBLE FOR THE SUITABILITY OF THE PLANS FOR THE INTENDED USE.
47. THE PLANS ARE PROVIDED AS A SERVICE TO THE PUBLIC. PLUMAS COUNTY MAKES NO REPRESENTATION OR WARRANTY OF ANY NATURE, WHETHER EXPRESS OR IMPLIED, REGARDING THE SUITABILITY OF THE PLANS FOR ANY PURPOSE. THE RECIPIENT OF THE PLANS IS SOLELY RESPONSIBLE FOR THE SUITABILITY OF THE PLANS FOR THE INTENDED USE.
48. THE PLANS ARE PROVIDED AS A SERVICE TO THE PUBLIC. PLUMAS COUNTY MAKES NO REPRESENTATION OR WARRANTY OF ANY NATURE, WHETHER EXPRESS OR IMPLIED, REGARDING THE SUITABILITY OF THE PLANS FOR ANY PURPOSE. THE RECIPIENT OF THE PLANS IS SOLELY RESPONSIBLE FOR THE SUITABILITY OF THE PLANS FOR THE INTENDED USE.
49. THE PLANS ARE PROVIDED AS A SERVICE TO THE PUBLIC. PLUMAS COUNTY MAKES NO REPRESENTATION OR WARRANTY OF ANY NATURE, WHETHER EXPRESS OR IMPLIED, REGARDING THE SUITABILITY OF THE PLANS FOR ANY PURPOSE. THE RECIPIENT OF THE PLANS IS SOLELY RESPONSIBLE FOR THE SUITABILITY OF THE PLANS FOR THE INTENDED USE.
50. THE PLANS ARE PROVIDED AS A SERVICE TO THE PUBLIC. PLUMAS COUNTY MAKES NO REPRESENTATION OR WARRANTY OF ANY NATURE, WHETHER EXPRESS OR IMPLIED, REGARDING THE SUITABILITY OF THE PLANS FOR ANY PURPOSE. THE RECIPIENT OF THE PLANS IS SOLELY RESPONSIBLE FOR THE SUITABILITY OF THE PLANS FOR THE INTENDED USE.
51. THE PLANS ARE PROVIDED AS A SERVICE TO THE PUBLIC. PLUMAS COUNTY MAKES NO REPRESENTATION OR WARRANTY OF ANY NATURE, WHETHER EXPRESS OR IMPLIED, REGARDING THE SUITABILITY OF THE PLANS FOR ANY PURPOSE. THE RECIPIENT OF THE PLANS IS SOLELY RESPONSIBLE FOR THE SUITABILITY OF THE PLANS FOR THE INTENDED USE.
52. THE PLANS ARE PROVIDED AS A SERVICE TO THE PUBLIC. PLUMAS COUNTY MAKES NO REPRESENTATION OR WARRANTY OF ANY NATURE, WHETHER EXPRESS OR IMPLIED, REGARDING THE SUITABILITY OF THE PLANS FOR ANY PURPOSE. THE RECIPIENT OF THE PLANS IS SOLELY RESPONSIBLE FOR THE SUITABILITY OF THE PLANS FOR THE INTENDED USE.
53. THE PLANS ARE PROVIDED AS A SERVICE TO THE PUBLIC. PLUMAS COUNTY MAKES NO REPRESENTATION OR WARRANTY OF ANY NATURE, WHETHER EXPRESS OR IMPLIED, REGARDING THE SUITABILITY OF THE PLANS FOR ANY PURPOSE. THE RECIPIENT OF THE PLANS IS SOLELY RESPONSIBLE FOR THE SUITABILITY OF THE PLANS FOR THE INTENDED USE.
54. THE PLANS ARE PROVIDED AS A SERVICE TO THE PUBLIC. PLUMAS COUNTY MAKES NO REPRESENTATION OR WARRANTY OF ANY NATURE, WHETHER EXPRESS OR IMPLIED, REGARDING THE SUITABILITY OF THE PLANS FOR ANY PURPOSE. THE RECIPIENT OF THE PLANS IS SOLELY RESPONSIBLE FOR THE SUITABILITY OF THE PLANS FOR THE INTENDED USE.
55. THE PLANS ARE PROVIDED AS A SERVICE TO THE PUBLIC. PLUMAS COUNTY MAKES NO REPRESENTATION OR WARRANTY OF ANY NATURE, WHETHER EXPRESS OR IMPLIED, REGARDING THE SUITABILITY OF THE PLANS FOR ANY PURPOSE. THE RECIPIENT OF THE PLANS IS SOLELY RESPONSIBLE FOR THE SUITABILITY OF THE PLANS FOR THE INTENDED USE.
56. THE PLANS ARE PROVIDED AS A SERVICE TO THE PUBLIC. PLUMAS COUNTY MAKES NO REPRESENTATION OR WARRANTY OF ANY NATURE, WHETHER EXPRESS OR IMPLIED, REGARDING THE SUITABILITY OF THE PLANS FOR ANY PURPOSE. THE RECIPIENT OF THE PLANS IS SOLELY RESPONSIBLE FOR THE SUITABILITY OF THE PLANS FOR THE INTENDED USE.
57. THE PLANS ARE PROVIDED AS A SERVICE TO THE PUBLIC. PLUMAS COUNTY MAKES NO REPRESENTATION OR WARRANTY OF ANY NATURE, WHETHER EXPRESS OR IMPLIED, REGARDING THE SUITABILITY OF THE PLANS FOR ANY PURPOSE. THE RECIPIENT OF THE PLANS IS SOLELY RESPONSIBLE FOR THE SUITABILITY OF THE PLANS FOR THE INTENDED USE.
58. THE PLANS ARE PROVIDED AS A SERVICE TO THE PUBLIC. PLUMAS COUNTY MAKES NO REPRESENTATION OR WARRANTY OF ANY NATURE, WHETHER EXPRESS OR IMPLIED, REGARDING THE SUITABILITY OF THE PLANS FOR ANY PURPOSE. THE RECIPIENT OF THE PLANS IS SOLELY RESPONSIBLE FOR THE SUITABILITY OF THE PLANS FOR THE INTENDED USE.
59. THE PLANS ARE PROVIDED AS A SERVICE TO THE PUBLIC. PLUMAS COUNTY MAKES NO REPRESENTATION OR WARRANTY OF ANY NATURE, WHETHER EXPRESS OR IMPLIED, REGARDING THE SUITABILITY OF THE PLANS FOR ANY PURPOSE. THE RECIPIENT OF THE PLANS IS SOLELY RESPONSIBLE FOR THE SUITABILITY OF THE PLANS FOR THE INTENDED USE.
60. THE PLANS ARE PROVIDED AS A SERVICE TO THE PUBLIC. PLUMAS COUNTY MAKES NO REPRESENTATION OR WARRANTY OF ANY NATURE, WHETHER EXPRESS OR IMPLIED, REGARDING THE SUITABILITY OF THE PLANS FOR ANY PURPOSE. THE RECIPIENT OF THE PLANS IS SOLELY RESPONSIBLE FOR THE SUITABILITY OF THE PLANS FOR THE INTENDED USE.

FOUNDATION DETAILS

DATE: 09-25-2023

JOB NO: 23013

SHEET S2.0

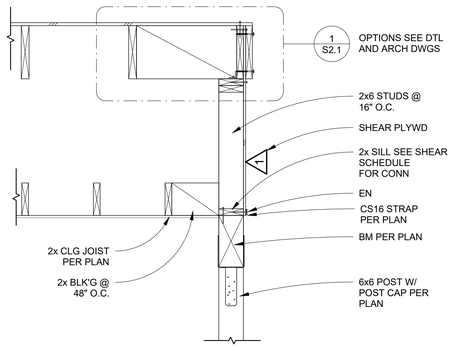

10 / S2.1 RAKE AT PORCH BM
3/4" = 1'-0"

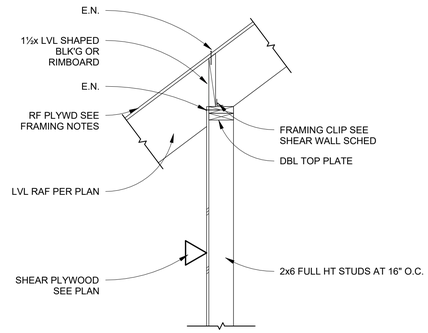

7 / S2.1 SHEAR WALL AT PORCH WALL
3/4" = 1'-0"

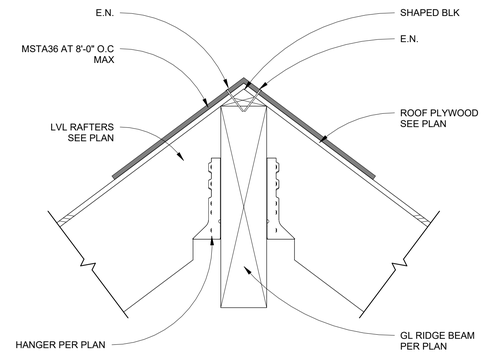

4 / S2.1 TYP RIDGE
1 1/2" = 1'-0"

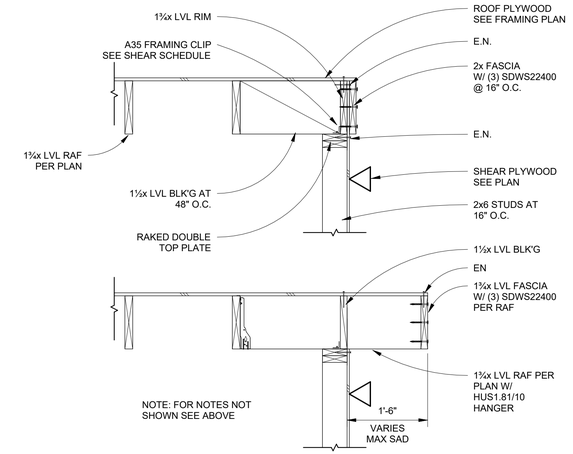

1 / S2.1 TYP RAKE
3/4" = 1'-0"

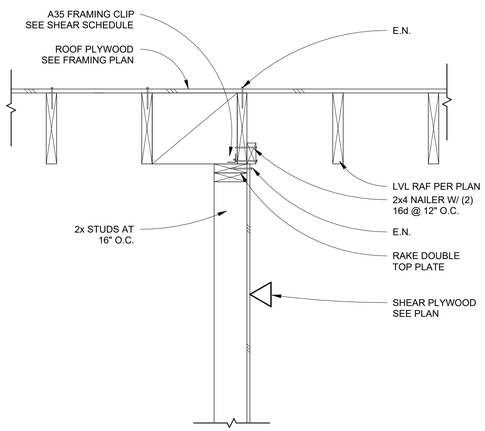

11 / S2.1 INTERIOR SHEAR WALL
1" = 1'-0"

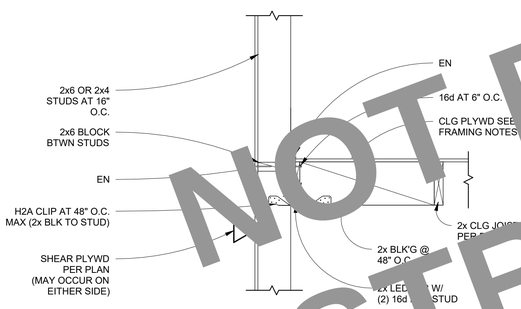

8 / S2.1 LOFT/CLG TO WALL CONN I
1" = 1'-0"

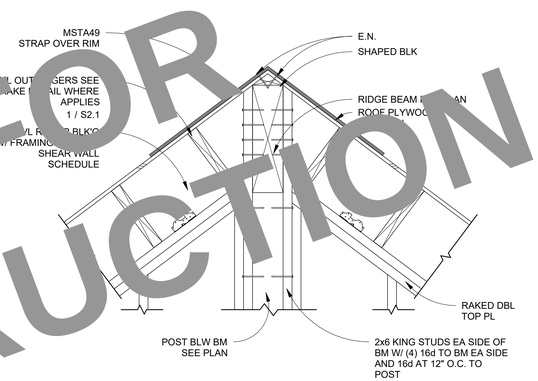

5 / S2.1 RIDGE BEAM CONN TO POST AT WALL
1" = 1'-0"

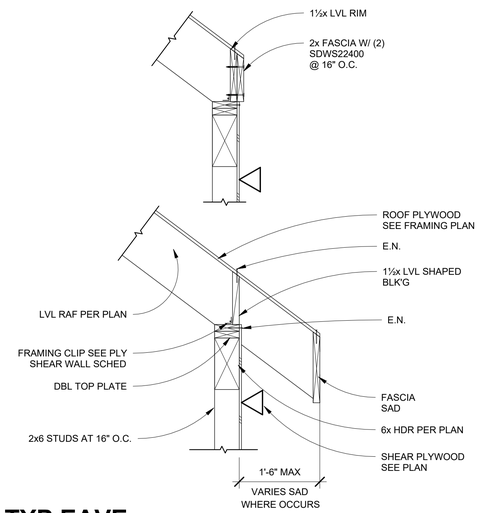

2 / S2.1 TYP EAVE
3/4" = 1'-0"

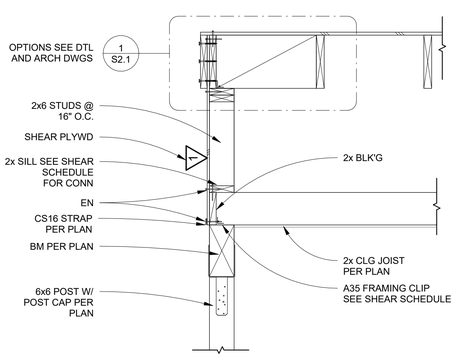

12 / S2.1 RAKE AT PORCH BM II
3/4" = 1'-0"

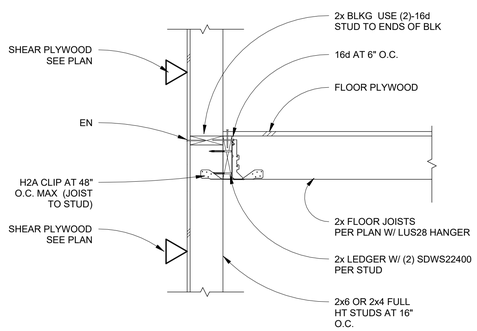

9 / S2.1 LOFT/CLG TO WALL CONN II
1" = 1'-0"

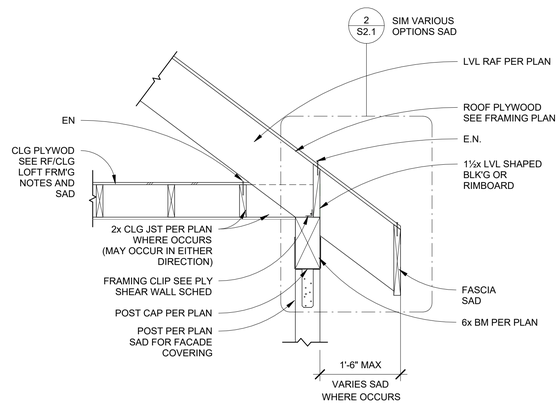

6 / S2.1 EAVE AT PORCH
3/4" = 1'-0"

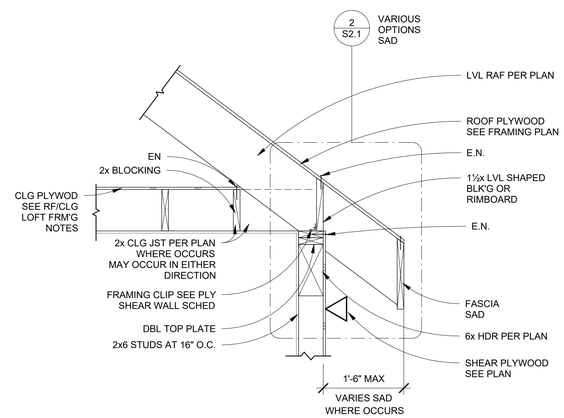

3 / S2.1 TYP EAVE W/ CLG JOIST
3/4" = 1'-0"

NOT FOR CONSTRUCTION

REVISION SCHEDULE

REV	DATE	BY

CM Taylor
STRUCTURAL ENGINEERING
C M Taylor Structural Engineering, Inc. 4245 Capitola Rd, Suite 204, Capitola, CA 95010
Phone: 831-854-2484 email: contact@cmtaylorse.com

PLUMAS COUNTY PRE-DESIGNED ADU

THIS PLAN, ALL DETAILS, DATA, AND SPECIFICATIONS ARE THE ORIGINAL PROPERTY OF C.M. TAYLOR STRUCTURAL ENGINEERING. THEY ARE PROVIDED FOR USE ON THIS PROJECT ONLY AND SHALL NOT BE REPRODUCED OR TRANSFERRED TO OTHERS FOR USE ON OTHER PROJECTS OR FOR ANY OTHER PURPOSE WITHOUT THE WRITTEN PERMISSION OF C.M. TAYLOR STRUCTURAL ENGINEERING. THE PLAN, DETAILS, DATA, AND SPECIFICATIONS ARE PROVIDED TO THE PLAN REVIEWER OF THE COUNTY OF PLUMAS ("COUNTY") FOR THE PURPOSE OF REVIEW FOR COMPLIANCE WITH THE APPLICABLE CODES, STANDARDS, AND REGULATIONS ENFORCED BY THE COUNTY OF PLUMAS. NO WARRANTIES OF ANY NATURE, WHETHER EXPRESS OR IMPLIED, ARE MADE TO THE COUNTY OF PLUMAS OR ANY OTHER PERSON OR ENTITY WITH RESPECT TO THE INFORMATION CONTAINED THEREON, ANY DELIVERABLES, OR THE SERVICES PROVIDED BY C.M. TAYLOR STRUCTURAL ENGINEERING. C.M. TAYLOR STRUCTURAL ENGINEERING HAS PROVIDED THE PLAN, DETAILS, DATA, AND SPECIFICATIONS ON THE BASIS THAT, EXCEPT AS MAY BE OTHERWISE AGREED BETWEEN C.M. TAYLOR STRUCTURAL ENGINEERING AND THE COUNTY OF PLUMAS, NO WARRANTIES OF ANY NATURE, WHETHER EXPRESS OR IMPLIED, ARE MADE TO THE COUNTY OF PLUMAS. THE COUNTY OF PLUMAS HAS ELECTED TO REVIEW THE PLAN, DETAILS, DATA, AND SPECIFICATIONS FOR COMPLIANCE WITH THE APPLICABLE CODES, STANDARDS, AND REGULATIONS ENFORCED BY THE COUNTY OF PLUMAS. THE COUNTY OF PLUMAS HAS ELECTED TO RELY ON THE PLAN, DETAILS, DATA, AND SPECIFICATIONS ON THE BASIS THAT, EXCEPT AS MAY BE OTHERWISE AGREED BETWEEN THE COUNTY OF PLUMAS AND C.M. TAYLOR STRUCTURAL ENGINEERING, C.M. TAYLOR STRUCTURAL ENGINEERING HAS NO RESPONSIBILITY FOR THE PURPOSES FOR WHICH THE COUNTY OF PLUMAS HAS ELECTED TO RELY ON THE PLAN, DETAILS, DATA, AND SPECIFICATIONS. THE COUNTY OF PLUMAS AND ANY OTHER PERSON OR ENTITY THAT RECEIVES THE PLAN, DETAILS, DATA, AND SPECIFICATIONS FROM THE COUNTY OF PLUMAS, NO WARRANTIES OF ANY NATURE, WHETHER EXPRESS OR IMPLIED, ARE MADE TO THE COUNTY OF PLUMAS OR ANY OTHER PERSON OR ENTITY WITH RESPECT TO THE PLAN, DETAILS, DATA, AND SPECIFICATIONS. THE COUNTY OF PLUMAS AND ANY OTHER PERSON OR ENTITY THAT RECEIVES THE PLAN, DETAILS, DATA, AND SPECIFICATIONS FROM THE COUNTY OF PLUMAS AGREES TO INDEMNIFY AND HOLD HARMLESS C.M. TAYLOR STRUCTURAL ENGINEERING FROM ALL CLAIMS, SUITS, LIABILITY, DAMAGES, JUDGEMENTS, OR COSTS ARISING OUT OF OR RELATED TO THE USE OF THE PLAN, DETAILS, DATA, AND SPECIFICATIONS. THE PLAN, DETAILS, DATA, AND SPECIFICATIONS ARE COPYRIGHTED AND SUBJECT TO COPYRIGHT PROTECTION. IF THE RECIPIENT DOES NOT AGREE WITH THE ABOVE CONDITIONS, THE RECIPIENT SHOULD NOT PROCEED FURTHER WITH THIS DOCUMENT.

ROOF FRAMING DETAILS

DATE: 09-25-2023

JOB NO: 23013

SHEET S2.1

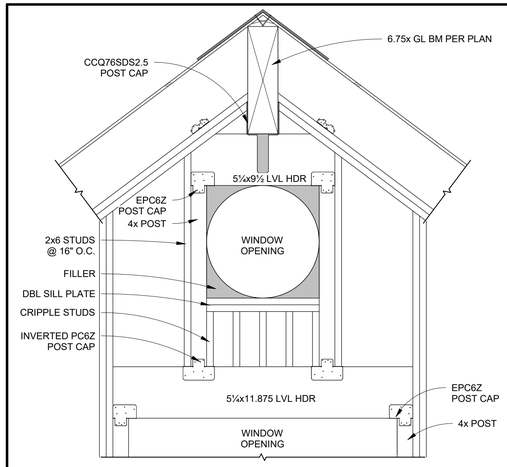

NOTE: FOR NOTES NOT SHOWN SEE DETAIL 5 / S2.1

10 / S2.2 RIDGE BM CONN TO POST @ WINDOW
3/4" = 1'-0"

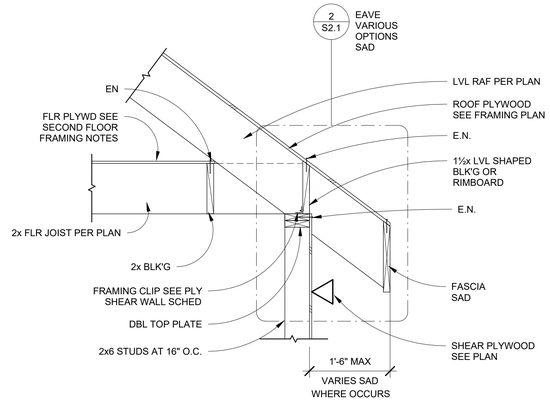

7 / S2.2 EAVE @ 2ND FLR/LOFT
3/4" = 1'-0"

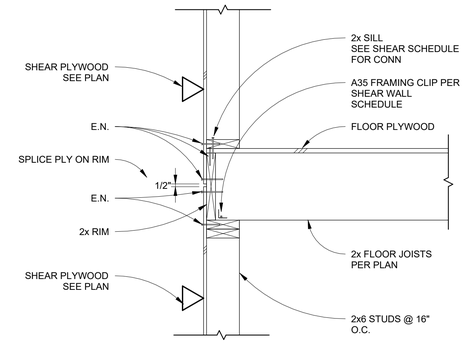

4 / S2.2 FLOOR TO WALL CONN II
1" = 1'-0"

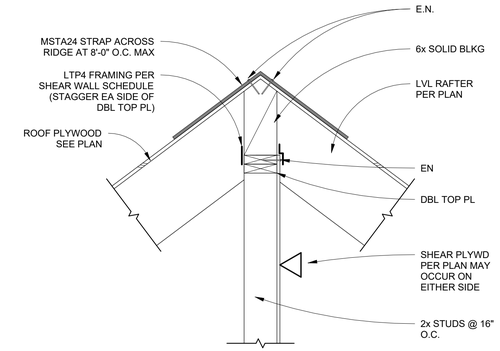

1 / S2.2 RIDGE AT BEARING WALL
1" = 1'-0"

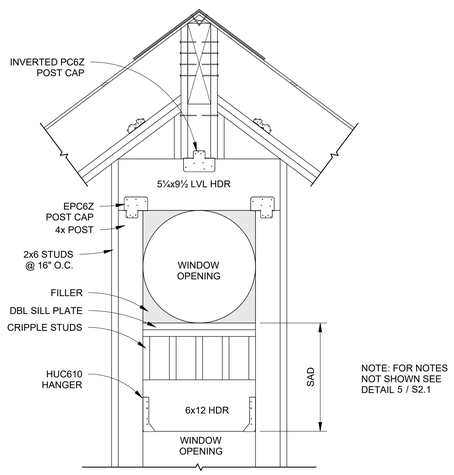

NOTE: FOR NOTES
NOT SHOWN SEE
DETAIL 5 / S2.1

11 / S2.2 RIDGE BM CONN TO POST @ WINDOW II
3/4" = 1'-0"

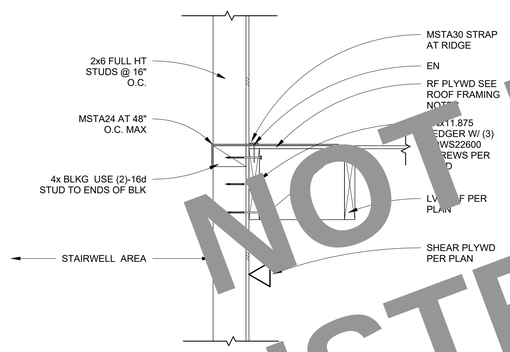

8 / S2.2 LOWER ROOF TO STAIRWELL WALL
1" = 1'-0"

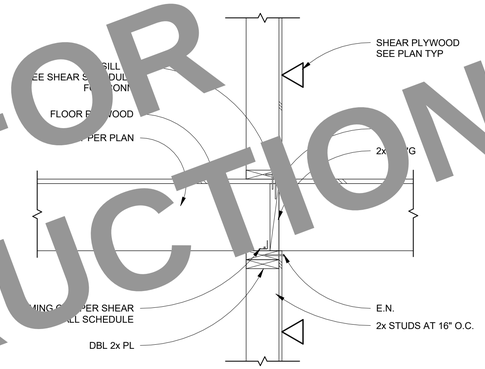

5 / S2.2 FLOOR TO INTERIOR WALL CONN I
1" = 1'-0"

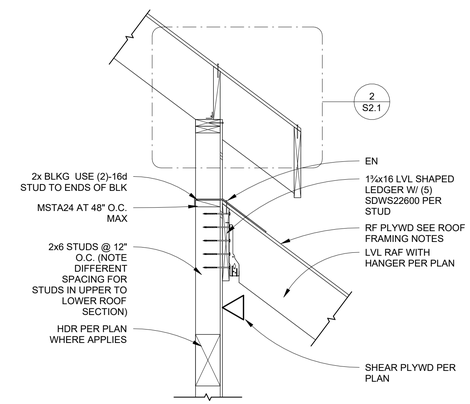

2 / S2.2 OVERLAP ROOFS @ EAVE
3/4" = 1'-0"

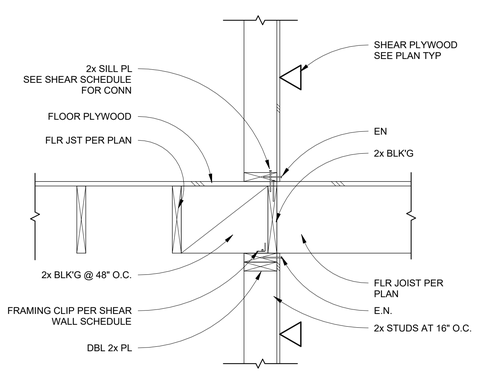

12 / S2.2 FLOOR TO INTERIOR WALL CONN III
1" = 1'-0"

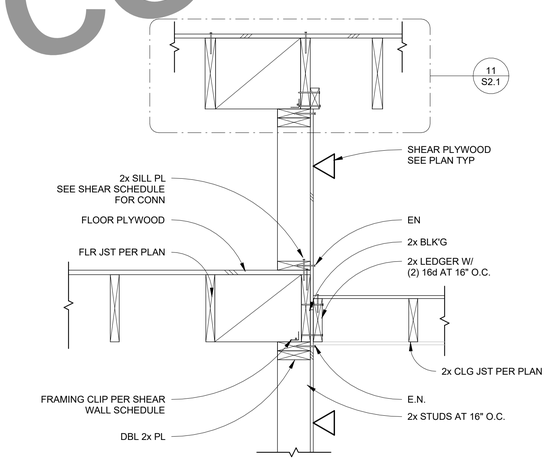

9 / S2.2 CONN @ FLR / CLG
1" = 1'-0"

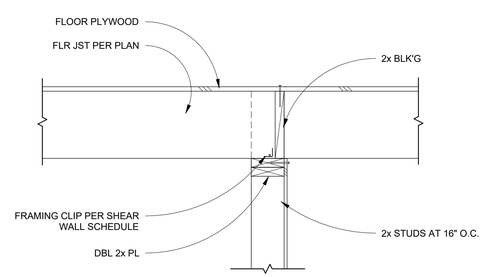

6 / S2.2 FLOOR TO INTERIOR WALL CONN II
1" = 1'-0"

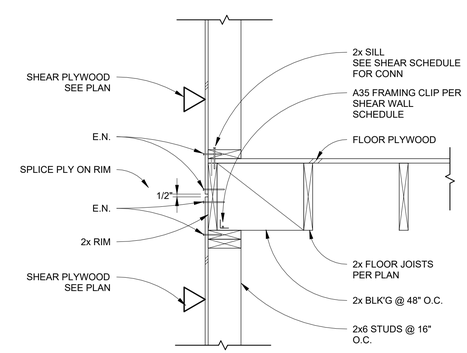

3 / S2.2 FLOOR TO WALL CONN I
1" = 1'-0"

NOT FOR CONSTRUCTION

REVISION SCHEDULE

REV	DATE	BY

CM Taylor
STRUCTURAL ENGINEERING
C M Taylor Structural Engineering, Inc. 4245 Capitola Rd, Suite 204, Capitola, CA 95010
Phone: 831-854-2484 email: contact@cmtaylorse.com

PLUMAS COUNTY PRE-DESIGNED ADU

THIS DOCUMENT, THE DESIGNS AND INFORMATION CONTAINED THEREIN, AS INSTRUMENTS OF SERVICE, IS PROPRIETARY TO C.M. TAYLOR STRUCTURAL ENGINEERING, INC. (CMTSE). ALL RIGHTS, INCLUDING BUT NOT LIMITED TO COPYRIGHTS, ARE RESERVED BY CMTSE. UNAUTHORIZED USE OR DISCLOSURE OF THIS DOCUMENT IN WHOLE OR IN PART, WITHOUT THE WRITTEN CONSENT OF CMTSE, IS PROHIBITED. THE PROPERTY OF THIS DOCUMENT AND THE INFORMATION CONTAINED THEREIN, WITH THE EXCEPTION OF THE PLANS SEALED AND SIGNED BY A LICENSED PROFESSIONAL ENGINEER, IS THE PROPERTY OF THE COUNTY OF PLUMAS. NO ASSIGNMENTS OF ANY INTERE ST IN THE DOCUMENTS AND THE INFORMATION CONTAINED THEREIN, WITHOUT THE WRITTEN CONSENT OF CMTSE, ARE PERMITTED BY LAW. INDEMNITY AND HOLD HARMLESS AGREEMENT AND ALL CLAIMS, SUITS, LIABILITY, DAMAGES, JUDGEMENTS, OR COSTS ARISING OUT OF THE USE OF THIS DOCUMENT BY OTHERS MUST BE SUBMITTED TO CMTSE PRIOR TO THE COMMENCEMENT OF ANY USE. THIS DOCUMENT IS COPYRIGHTED AND SUBJECT TO COPYRIGHT PROTECTION. IF THE RECIPIENT DOES NOT AGREE WITH THE ABOVE CONDITIONS, THE RECIPIENT SHOULD NOT PROCEED BEYOND THIS DOCUMENT.

ROOF FRAMING DETAILS (CONTINUED)

DATE: 09-25-2023

JOB NO: 23013

SHEET S2.2

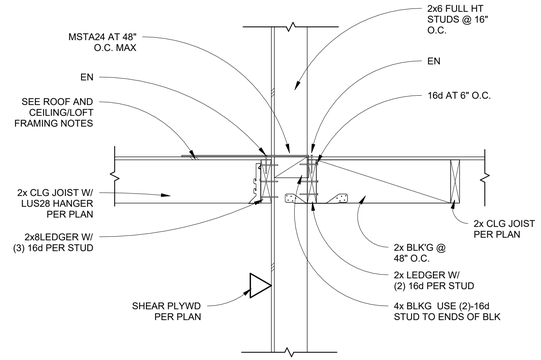

7 S2.3 **CLG JOIST AT PORCH III**
1" = 1'-0"

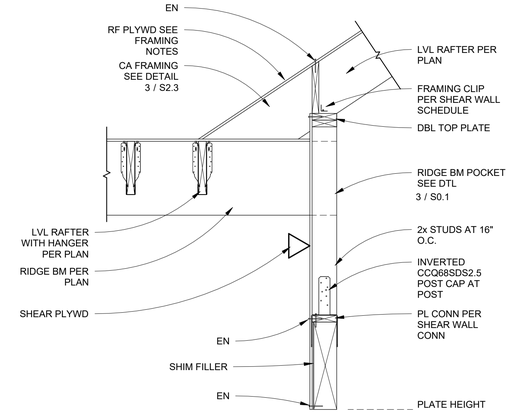

4 S2.3 **DROPPED BEAM CONN**
3/4" = 1'-0"

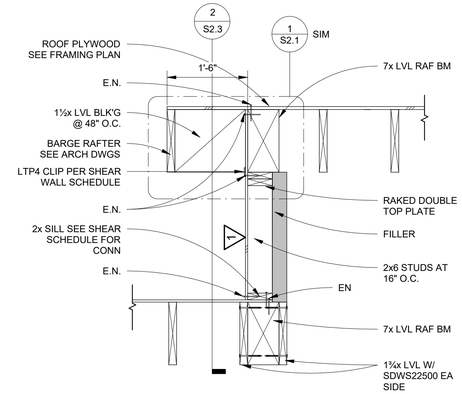

1 S2.3 **RAKE AT INTERSECTING ROOF**
3/4" = 1'-0"

NOT FOR CONSTRUCTION

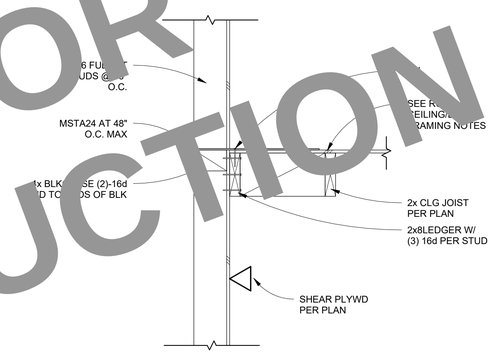

5 S2.3 **CLG JOIST AT PORCH I**
1" = 1'-0"

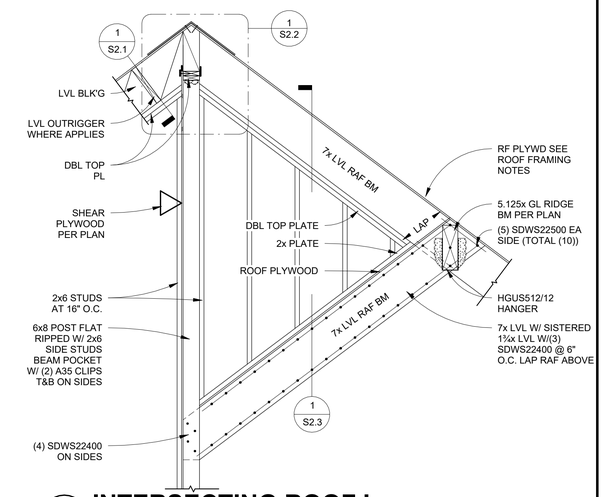

2 S2.3 **INTERSECTING ROOF I**
1/2" = 1'-0"

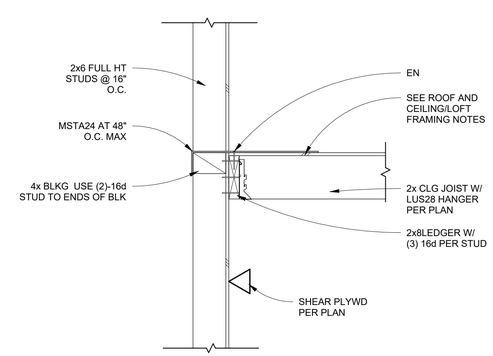

6 S2.3 **CLG JOIST AT PORCH II**
1" = 1'-0"

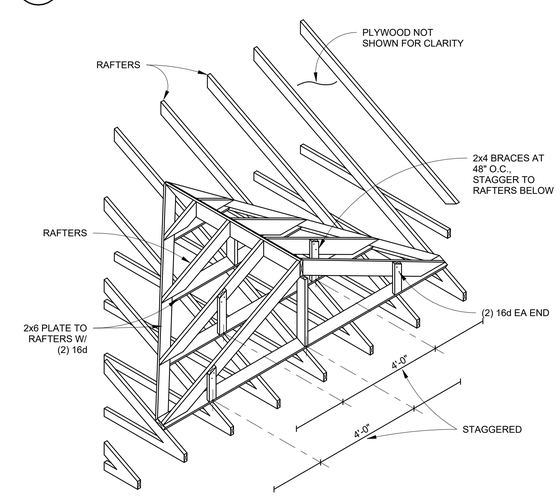

3 S2.3 **TYP CALIFORNIA FRAMING DETAIL**
3/8" = 1'-0"

REVISION SCHEDULE

REV	DATE	BY

CM Taylor
STRUCTURAL ENGINEERING
C M Taylor Structural Engineering, Inc. 4245 Capitola Rd, Suite 204, Capitola, CA 95010
Phone: 831-854-2484 email: contact@cmtaylorse.com

PLUMAS COUNTY PRE-DESIGNED ADU

IT IS THE RESPONSIBILITY OF THE CONTRACTOR TO VERIFY ALL DIMENSIONS AND CONDITIONS ON THE JOB SITE PRIOR TO THE PERFORMANCE OF ANY WORK. THIS PLAN IS PROVIDED FOR THE USE OF THE COUNTY OF PLUMAS, CALIFORNIA, AND THE COUNTY OF PLUMAS SHALL NOT BE RESPONSIBLE FOR THE MODIFICATION OR ALTERATION OF THIS PLAN. THE COUNTY OF PLUMAS SHALL NOT BE RESPONSIBLE FOR THE USE OF THIS DOCUMENT BY OTHERS. THE COUNTY OF PLUMAS HAS NO ASSUMPTIONS OF ANY KIND, NEITHER EXPRESS OR IMPLIED, OVER THE INFORMATION CONTAINED HEREIN, AND THE COUNTY OF PLUMAS HAS NO RESPONSIBILITY FOR ANY DAMAGES, LOSSES, OR EXPENSES ARISING OUT OF OR RESULTING FROM THE USE OF THIS DOCUMENT. THE COUNTY OF PLUMAS HAS NO RESPONSIBILITY TO UPDATE THE INFORMATION CONTAINED HEREIN, AND THE COUNTY OF PLUMAS HAS NO RESPONSIBILITY TO ANY PERSON OR ENTITY FOR ANY DAMAGES, LOSSES, OR EXPENSES ARISING OUT OF OR RESULTING FROM THE USE OF THIS DOCUMENT. THE COUNTY OF PLUMAS HAS NO RESPONSIBILITY TO UPDATE THE INFORMATION CONTAINED HEREIN, AND THE COUNTY OF PLUMAS HAS NO RESPONSIBILITY TO ANY PERSON OR ENTITY FOR ANY DAMAGES, LOSSES, OR EXPENSES ARISING OUT OF OR RESULTING FROM THE USE OF THIS DOCUMENT. THE RECIPIENT AGREES TO INDEMNIFY AND HOLD HARMLESS THE COUNTY OF PLUMAS AND ITS OFFICERS, AGENTS, AND EMPLOYEES, FROM ANY CLAIM, ARISING FROM OR CONNECTED WITH THE RECEIPT AND/OR USE OF THIS DOCUMENT. IT IS UNLAWFUL AND A VIOLATION OF FEDERAL LAW TO COPY, REPRODUCE OR TRANSMIT THIS DOCUMENT, IN WHOLE OR IN PART, BY ANY MEANS WHATSOEVER, WITHOUT THE PERMISSION OF THE COUNTY OF PLUMAS. NO ASSUMPTIONS OF ANY KIND, NEITHER EXPRESS OR IMPLIED, OVER THE INFORMATION CONTAINED HEREIN, AND THE COUNTY OF PLUMAS HAS NO RESPONSIBILITY TO ANY PERSON OR ENTITY FOR ANY DAMAGES, LOSSES, OR EXPENSES ARISING OUT OF OR RESULTING FROM THE USE OF THIS DOCUMENT. THE RECIPIENT AGREES TO INDEMNIFY AND HOLD HARMLESS THE COUNTY OF PLUMAS AND ITS OFFICERS, AGENTS, AND EMPLOYEES, FROM ANY CLAIM, ARISING FROM OR CONNECTED WITH THE RECEIPT AND/OR USE OF THIS DOCUMENT. IT IS UNLAWFUL AND A VIOLATION OF FEDERAL LAW TO COPY, REPRODUCE OR TRANSMIT THIS DOCUMENT, IN WHOLE OR IN PART, BY ANY MEANS WHATSOEVER, WITHOUT THE PERMISSION OF THE COUNTY OF PLUMAS. IF THE RECIPIENT DOES NOT AGREE WITH THE ABOVE CONDITIONS, THE RECIPIENT SHOULD NOT PROCEED BEYOND THIS DISCLAIMER.

ROOF FRAMING DETAILS (CONTINUED)

DATE: 09-25-2023
JOB NO: 23013
SHEET S2.3

SYMBOLS & ABBREVIATIONS (MECHANICAL)

BT	BYPASS TIMER
℄	CENTER LINE
CD	CONDENSATE DRAIN
Ø	DIAMETER
	EXHAUST, RETURN, SUPPLY AIR DUCT (EXISTING)
	EXHAUST, RETURN, SUPPLY AIR DUCT (NEW)
	EXTENT OF DEMOLITION
	EXHAUST DUCT UP, DOWN, PENE & DEMO
	FIRE/SMOKE DAMPER
	FIRE DAMPER
	POINT OF CONNECTION
	P/T PLUG
	RETURN OR EXHAUST AIR
	RETURN DUCT UP, DOWN, PENE & DEMO
S	SPEED CONTROL SWITCH
X	SPIN-IN EXTRACTOR/DAMPER
	SUPPLY DUCT UP, DOWN, PENE & DEMO
	SUPPLY OR OUTSIDE AIR
T	THERMOSTAT at + 48"
X	TO BE REMOVED
	TRANSFER AIR
	TURNING VANES
	VOLUME DAMPER

AD	ACCESS DOOR
AFF	ABOVE FINISH FLOOR
AL	ACOUSTICALLY LINED
AP	ACCESS PANEL
BD	BALANCING DAMPER
BDD	BACKDRAFT DAMPER
BHP	BRAKE HORSE POWER
BJ	BETWEEN JOIST
BTU	BRITISH THERMAL UNIT
C.	CONDUIT
CA	COMBUSTION AIR
CD	CONDENSATE DRAIN
CFM	CUBIC FEET PER MINUTE
DEMO	DEMOLITION
DL	DOOR LOUVER
(E)	EXISTING
EAD	EXHAUST AIR DUCT
EC	ELECTRICAL CONTRACTOR
EDB	ENTERING DRY BULB
EOD	EXTENT OF DEMOLITION
ETR	EXISTING TO REMAIN
EWB	ENTERING WET BULB
EWT	ENTERING WATER TEMPERATURE
°F	DEGREES FAHRENHEIT
FC	FLEXIBLE CONNECTION
FD	FIRE DAMPER
FLA	FULL LOAD AMPS
FSD	FIRE SMOKE DAMPER
FT.HD.	FEET HEAD
FTR	FLUE THRU ROOF
GC	GENERAL CONTRACTOR
GPM	GALLONS PER MINUTE
HP	HORSE POWER
KW	KILOWATTS
LBS	POUNDS
LWT	LEAVING WATER TEMPERATURE
MBH	1,000 BTU/HR
MC	MECHANICAL CONTRACTOR
(N)	NEW
NIC	NOT IN CONTRACT
NTS	NOT TO SCALE
OBD	OPPOSED BLADE DAMPER
OSA	OUTSIDE AIR
PC	PLUMBING CONTRACTOR
PENE	PENETRATION
PD	PRESSURE DROP
PH	PHASE
POC	POINT OF CONNECTION
P/N	PART NUMBER
PRV	PRESSURE REDUCING VALVE
PSI	POUNDS PER SQUARE INCH
P/T	PRESSURE / TEMPERATURE
RA	RETURN AIR
RAD	RETURN AIR DUCT
(RL)	RELOCATE
RPM	REVOLUTIONS PER MINUTE
SA	SUPPLY AIR
SAD	SUPPLY AIR DUCT
SD	SUPPLY DIFFUSER
SP	STATIC PRESSURE
SS	STAINLESS STEEL
STD	STANDARD
TV	TURNING VANES
TYP	TYPICAL
UCD	UNDERCUT DOOR
UON	UNLESS OTHERWISE NOTED
V	VOLT
VD	VOLUME DAMPER
VIF	VERIFY IN FIELD
W/	WITH
WC	WATER COLUMN
WT	WEIGHT
W/O	WITH OUT

GENERAL MECHANICAL NOTES

1. ENTIRE INSTALLATION SHALL CONFORM TO THE REQUIREMENTS OF THE 2022 CALIFORNIA MECHANICAL CODE, CALIFORNIA PLUMBING CODE, CALIFORNIA BUILDING CODE, NATIONAL FIRE PROTECTION CODES, AND ALL OTHER APPLICABLE CODES AND REGULATIONS, INCLUDING THE CALIFORNIA ENERGY CONSERVATION STANDARDS OF TITLE 24.
2. LOCATIONS OF ALL CEILING DIFFUSERS, REGISTERS AND GRILLES ARE DETAILED ON THE ARCHITECTURAL REFLECTED CEILING PLAN AND ROOM ELEVATIONS.
3. LOCATION OF ALL ROOF OPENINGS AND THE LOCATION OF ALL ROOF MOUNTED EQUIPMENT SUPPORTS ARE DETAILED ON THE STRUCTURAL AND ARCHITECTURAL PLANS.
4. PLATFORMS, CURBS AND FLASHING FOR EQUIPMENT SHALL BE AS INDICATED ON THE STRUCTURAL AND ARCHITECTURAL PLANS. COORDINATE THE EXACT SIZES OF REQUIRED OPENINGS AND SUPPORT FOR THE FURNISHED EQUIPMENT.
5. ALL EQUIPMENT SHALL BE INSTALLED IN STRICT ACCORDANCE WITH THE EQUIPMENT MANUFACTURER'S RECOMMENDATIONS. PROVIDE ALL FITTINGS, TRANSITIONS, DAMPERS, VALVES, AND OTHER DEVICES REQUIRED FOR A COMPLETE WORKABLE INSTALLATION.
6. ALL DUCTWORK SHALL BE CONSTRUCTED, ERECTED, AND TESTED IN ACCORDANCE WITH THE APPLICABLE SMACNA STANDARDS.
7. ALL EXPOSED DUCTS TO BE PAINTED TO MATCH WALLS.
8. DUCTWORK SHALL BE INSULATED WITH 2" FIBERGLASS INSULATION AND ALL SERVICE JACKET. PROVIDE 1" ACOUSTICAL LINER WHERE SHOWN ON PLANS. DUCT DIMENSIONS ON PLANS ARE NET CLEAR INTERIOR.
9. MANUAL DAMPERS SHALL BE PROVIDED IN ALL DUCT BRANCHES TO INDIVIDUAL DIFFUSERS, GRILLES AND REGISTERS.
10. ALL EQUIPMENT, DUCTS, PIPING, AND OTHER DEVICES AND MATERIALS INSTALLED OUTSIDE THE BUILDING OR OTHERWISE EXPOSED TO THE WEATHER SHALL BE COMPLETELY WEATHERPROOFED.
11. PIPES AND DUCTWORK SHALL BE SUPPORTED AND BRACED PER SMACNA "GUIDELINES FOR SEISMIC RESTRAINTS OF MECHANICAL SYSTEMS AND PLUMBING PIPING SYSTEMS."
12. EXPOSED PIPING ALLOWED ONLY WHERE INDICATED. PROVIDE ESCUTCHEONS IN FINISHED AREAS.
13. PROVIDE ROUGH-IN AND FINAL CONNECTIONS FOR EQUIPMENT PROVIDED UNDER OTHER DIVISIONS OF THE SPECIFICATIONS. SEE ARCHITECTURAL DRAWINGS FOR LOCATIONS OF EQUIPMENT.
14. PENETRATIONS OF RATED ASSEMBLIES SHALL BE FIRE STOPPED BY AN APPROVED MATERIAL AS PRESCRIBED IN CBC SECTION 714.
15. REFER TO STRUCTURAL DRAWING FOR LOCATIONS OF BEAMS, SHEAR WALLS AND MEMBERS. ALL DRILLING OF STRUCTURAL BEAMS AND MEMBERS TO BE COORDINATED WITH THE STRUCTURAL ENGINEER. ALL HOLES SHALL BE MINIMUM SIZE AND APPROVED BY STRUCTURAL ENGINEER PRIOR TO DRILLING.
16. FIELD VERIFY LOCATION AND SIZE OF ALL EXISTING PIPING, DUCTWORK AND EQUIPMENT PRIOR TO FABRICATION OF ANY NEW WORK.
17. STRUCTURAL STEEL SHALL CONFORM TO ASTM A-36. BOLTS SHALL CONFORM TO [illegible]07. FABRICATION, ERECTION, WELDING AND PAINTING SHALL BE IN ACCORDANCE WITH THE LATEST EDITION OF THE AMERICAN INSTITUTE OF STEEL CONSTRUCTION SPECIFICATIO[illegible] STEEL EXPOSED TO WEATHER SHALL BE GALVANIZED.
18. THE INTENT OF THE DRAWINGS AND SPECIFICATIONS IS [illegible] PRO[illegible] PRE-DESIGN[illegible] BUILD AC[illegible]SORY DWELLING UNITS IN ACCORDANCE WITH THE 2022 EDITI[illegible] OF T[illegible]ITLE 24 CALI[illegible]NIA CODE [illegible] REGULATIONS. SHOULD ANY CONDITION [illegible]P NOT [illegible]ERE[illegible] THE CONTR[illegible] DOCUMENTS WHEREIN THE FINISHED WORK WILL NOT C[illegible]TH SA[illegible]TLE [illegible]CCR, A CH[illegible]E ORDER DETAILING AND SPECIFYING THE REQUIRED WORK SHA[illegible]E S[illegible]MITT[illegible] AND A[illegible] THE DESIGN TEAM BEFORE PROCEEDING WITH THE WORK.
19. ATTACHMENTS OF EQUIPMENT WEIGHING LESS [illegible]AN 400 [illegible] AND SUPPORTED DIRECTLY FROM THE FLOOR OR ROOF STRUCTURE, FURNITURE OR T[illegible]PORARY OR MOVEABLE EQUIPMENT WEIGHING LESS THAN 20 LBS. THAT IS SUPPORTED BY VIBRATIO[illegible] ISOLATOR DEVICES SUSPENDED FROM THE [illegible] WALL OR FLOOR NEED NOT BE DETAILED ON THE PLANS (CCR TITLE 24, PART 2, SECTIO[illegible] EXCEPTION). HOWEVER, SUCH EQUIPMENT MUST BE SUPPORTED AND ANCHORED T[illegible] FORCES PRESCRIBED PER ASCE-7, CHAPTER 13 AS MODIFIED BY CBC [illegible] AND THE ANCHORAGE SHALL BE APPROVED BY THE STRUCTURAL ENGINEER OF [illegible]ORD. THE INSPECTO[illegible] OF RECORD SHALL ASSURE THAT THE ABOVE REQUIREMENTS AR[illegible] ENFO[illegible]ED.
20. DUCTWORK VISIBLE THROUGH DIFFUSERS AND [illegible]GISTERS S[illegible]L BE [illegible]CK.
21. INSULATION MATERIAL SHALL MEET THE STATE [illegible]STAND[illegible] PER SECTION 11[illegible] CALIFORNIA ENERGY CODE (CEC).
22. DOORS AND WINDOWS S[illegible]L MEET THE [illegible]MUM [illegible]FILTRA[illegible]QUIREMENTS PER SECTION 118 CEC.
23. ALL [illegible]NG AND DUCTWO[illegible] SHALL BE INS[illegible]TED CO[illegible]SISTENT WITH THE REQUIREMENTS OF SECTION 118[illegible]23, 124 CEC. AND [illegible]E 503 [illegible](9)(10)(11) OF MECHANICAL CODE.
24. ALL [illegible]C SYSTEMS S[illegible]LL MEET THE CONTROL REQUIREMENTS PER SECTIONS 112 AND 122 CEC.
25. ALL HV[illegible] AND APPLIANCES SHALL MEET THE REQUIREMENTS OF SECTIONS 111-113, 115, AND 120-[illegible]EC.

SYMBOLS & ABBREVIATIONS (PLUMBING)

	BALANCING COCK
	BALL VALVE
	CAP
	CHECK VALVE
	CLEANOUT
	DOMESTIC COLD WATER (EXISTING)
	DOMESTIC COLD WATER (NEW)
	DOMESTIC HOT WATER (EXISTING)
	DOMESTIC HOT WATER (NEW)
	DOMESTIC HOT WATER RETURN (EXISTING)
	DOMESTIC HOT WATER RETURN (NEW)
	DIRECTION OF FLOW
DSP	DRY STANDPIPE
FL	FIRE SPRINKLER PIPING
	FLANGED UNION
	FLOOR DRAIN
	FLOOR SINK
FM	FORCE MAIN
G	GAS PIPING (EXISTING)
G	GAS PIPING (NEW)
	GAS COCK
	GATE VALVE
	GLOBE VALVE
	HOSE BIBB (3/4" MIN.)
	PETES PLU[illegible]
	PIPE (A[illegible]E THE CEIL[illegible]
	[illegible] HAN[illegible]
	[illegible]URN[illegible] (RIS[illegible]
	PIP[illegible]RNI[illegible]OWN (DRO[illegible]
	PIP[illegible]E DOW[illegible]
	[illegible]SURE REDUCING VALVE
	T & PRV RELIEF VALVE
	POINT OF CONNECTION TO EXISTING
RWL	RAIN WATER LEADER (EXISTIN[illegible]
RWL	RAIN [illegible]
	RE[illegible]ER
	RO[illegible] DRAIN
[illegible]D	STO[illegible] DRAIN (EXIS[illegible])
	[illegible]TORM [illegible]
	[illegible]TRAINER
	SUB-SOIL PIPING
	UNION
	VENT PIPING (EXISTING)
	VENT PIPING (NEW)
	WASTE PIPING (EXISTING)
	(N) WASTE PIPING (NEW)
W	WASTE PIPING - UNDERGROUND (NEW)
WSP	WET STANDPIPE (EXISTING)
WSP	WET STANDPIPE (NEW)
	WATERHAMMER ARRESTOR (WHA)
	TRAP PRIMER (TP)

AFF	ABOVE FINISH FLOOR
AP	ACCESS PANEL
BV	BALL VALVE
CA	COMPRESSED AIR PIPING
CB	CATCH BASIN
CD	CONDENSATE
CFH	CUBIC FEET PER HOUR
CI	CAST IRON
CP	CHROME PLATED
DCW	DOMESTIC COLD WATER
DHW	DOMESTIC HOT WATER
DHWR	DOMESTIC HOT WATER RETURN
DCV	DETECTOR CHECK VALVE
DN	DOWN
DS	DOWN SPOUT
DSP	DRY STAND PIPE
(E)	EXISTING
EC	ELECTRICAL CONTRACTOR
EL	ELEVATION
(F)	FIRE SPRINKLER PIPING
FC	FLEX CONNECTOR
FCO	FLOOR CLEANOUT
FD	FLOOR DRAIN
FL	FIRE LINE
FM	FORCE MAIN
FS	FLOOR SINK
FSC	FIRE SPRINKLER CONTRACTOR
GC	GENERAL CONTRACTOR
GCO	GROUND CLEANOUT
GPM	GALLONS PER MINUTE
HB	HOSE BIBB
HWS	HOT WATER SUPPLY
IE:	INVERT ELEVATION
LAV	LAVATORY
MC	MECHANICAL CONTRACTOR
NPW	NON POTABLE WATER
(N)	NEW
OFD	OVERFLOW DRAIN
PC	PLUMBING CONTRACTOR
PIV	POST INDICATION VALVE
POC	POINT OF CONNECTION
POD	POINT OF DEMOLITION
PP	PETES PLUG
PRV	PRESS[illegible]EDUC[illegible]ALVE
PVC	POLY[illegible] CHLORIDE [illegible]
[illegible]	ROO[illegible]AIN
[illegible] BFP	[illegible]ACK[illegible]W PREVENTOR [illegible]EDUC[illegible] PRESSURE
RWL	[illegible]N WA[illegible]EADER
SD	[illegible]RM DR[illegible]
[illegible]OV	S[illegible]OFF VALVE
[illegible]	SANITARY SEWER
[illegible]	TRAP PRIMER
V	VENT
VB	VALVE BOX
VIF	VERIFY IN FIELD
VTR	VENT THRU ROOF
W	WASTE
WC	WATER CLOSET
WCO	WALL CLEANOUT
WH	WATER HEATER
WHA	WATER HAMMER ARRESTOR
WM	WATER METER

NOT FOR CONSTRUCTION

GENERAL PLUMBING NOTES

1. ENTIRE INSTALLATION SHALL CONFORM TO THE REQUIREMENTS OF THE 2022 CALIFORNIA PLUMBING CODE AND ALL OTHER APPLICABLE CODES AND REGULATIONS, INCLUDING THE CALIFORNIA ENERGY CONSERVATION STANDARDS OF TITLE 24.
2. LOCATION OF ALL ROOF OPENINGS AND THE LOCATION OF ALL ROOF MOUNTED EQUIPMENT SUPPORTS ARE DETAILED ON THE STRUCTURAL AND ARCHITECTURAL PLANS.
3. PLATFORMS, CURBS AND FLASHING FOR EQUIPMENT SHALL BE AS INDICATED ON THE STRUCTURAL AND ARCHITECTURAL PLANS. COORDINATE THE EXACT SIZES OF REQUIRED OPENINGS AND SUPPORT FOR THE FURNISHED EQUIPMENT.
4. ALL EQUIPMENT SHALL BE INSTALLED IN STRICT ACCORDANCE WITH THE EQUIPMENT MANUFACTURER'S RECOMMENDATIONS. PROVIDE ALL FITTINGS, TRANSITIONS, VALVES, AND OTHER DEVICES REQUIRED FOR A COMPLETE WORKABLE INSTALLATION.
5. ALL EQUIPMENT, PIPING, AND OTHER DEVICES AND MATERIALS INSTALLED OUTSIDE THE BUILDING OR OTHERWISE EXPOSED TO THE WEATHER SHALL BE COMPLETELY WEATHERPROOFED.
6. PIPES SHALL BE SUPPORTED AND BRACED PER SMACNA "GUIDELINES FOR SEISMIC RESTRAINTS OF MECHANICAL SYSTEMS AND PLUMBING PIPING SYSTEMS."
7. COORDINATE PLUMBING SYSTEMS WITH WORK OF OTHER TRADES PRIOR TO ANY FABRICATION OR INSTALLATION. PROVIDE ALL FITTINGS, OFFSETS, AND TRANSITIONS AS REQUIRED FOR A COMPLETE WORKABLE INSTALLATION.
8. EXPOSED PIPING ALLOWED ONLY WHERE INDICATED. PROVIDE ESCUTCHEONS IN FINISHED AREAS.
9. MAINTENANCE LABEL SHALL BE AFFIXED TO ALL PLUMBING EQUIPMENT.
10. PROVIDE ROUGH-IN AND FINAL CONNECTIONS FOR EQUIPMENT PROVIDED UNDER OTHER DIVISIONS OF THE SPECIFICATIONS. SEE ARCHITECTURAL DRAWINGS FOR LOCATIONS OF EQUIPMENT.
11. PENETRATIONS OF RATED ASSEMBLIES SHALL BE FIRE STOPPED BY AN APPROVED MATERIAL AS PRESCRIBED IN CBC SECTION 714.
12. REFER TO STRUCTURAL DRAWING FOR LOCATIONS OF BEAMS, SHEAR WALLS AND MEMBERS. ALL DRILLING OF STRUCTURAL BEAMS AND MEMBERS TO BE COORDINATED WITH THE STRUCTURAL ENGINEER. ALL HOLES SHALL BE MINIMUM SIZE AND APPROVED BY STRUCTURAL ENGINEER PRIOR TO DRILLING.
13. FIELD VERIFY LOCATION AND SIZE OF ALL EXISTING PIPING, DUCTWORK AND EQUIPMENT PRIOR TO FABRICATION OF ANY NEW WORK.
14. ALL WATER CLOSETS CONTROLS SHALL BE ON THE SIDE OF THE FIXTURE AWAY FROM THE WALL.
15. ALL FAUCET CONTROLS SHALL BE OPERABLE WITH THE HAND AND SHALL NOT REQUIRE TIGHT GRASPING, PINCHING OR TWISTING OF THE WRIST.
16. PC SHALL PROVIDE CONCRETE INSERTS FOR HANGING PLUMBING EQUIPMENT, COORD. W/ GC.

BY USING THESE PRE-DESIGNED ADU PLANS, THE RECIPIENT IS ACKNOWLEDGING ACCEPTANCE OF THE FOLLOWING CONDITIONS.

1. THE USE OF THIS INFORMATION IS RESTRICTED TO THE ORIGINAL PROJECT FOR WHICH IT WAS PREPARED FOR (THE PRE-DESIGNED ADU PLANS FOR THE COUNTY OF MONTEREY, CALIFORNIA). THIS DOES NOT ELIMINATE OR REDUCE THE RECIPIENT'S RESPONSIBILITY TO VERIFY ANY AND ALL INFORMATION RELEVANT TO THE RECIPIENT'S WORK AND RESPONSIBILITY ON THIS PROJECT. WORKBENCH AND/OR THE JURISDICTIONS LISTED ABOVE SHALL NOT BE RESPONSIBLE FOR TRANSLATION ERRORS.
2. THE RECIPIENT RECOGNIZES AND ACKNOWLEDGES THAT THE USE OF THIS INFORMATION WILL BE AT THEIR SOLE RISK AND WITHOUT ANY LIABILITY OR LEGAL EXPOSURE TO WORKBENCH OR CITIES STATED ABOVE. NO WARRANTIES OF ANY NATURE, WHETHER EXPRESS OR IMPLIED, SHALL ATTACH TO THESE DOCUMENTS AND THE INFORMATION CONTAINED THERON. ANY USE, REUSE, OR ALTERATION OF THESE DOCUMENTS BY THE RECIPIENT OR BY OTHERS WILL BE AT THE RECIPIENT'S RISK AND FULL LEGAL RESPONSIBILITY. FURTHERMORE, THE RECIPIENT WILL, TO THE FULLEST EXTENT PERMITTED BUY LAW, INDEMNIFY AND HOLD WORKBENCH AND THE CITIES STATED ABOVE HARMLESS FROM ANY AND ALL CLAIMS, SUITS, LIABILITY, DEMANDS, JUDGEMENTS, OR COSTS ARISING OUT OF OR RESULTING THERE FROM ON ACCOUNT OF ANY INJURY, DEATH, DAMAGE OR LOSS TO PERSONS OR PROPERTY.
3. THE DESIGNS REPRESENTED BY THESE PLANS ARE COPYRIGHTED AND ARE SUBJECT TO COPYRIGHT PROTECTION. IF THE RECIPIENT DOES NOT AGREE WITH THE ABOVE CONDITIONS, DO NOT PROCEED BEYOND THIS DISCLAIMER.

ZAL ENGINEERING
ZAL ENGINEERING
MECHANICAL CONSULTANTS
99 PACIFIC ST, STE 375G
MONTEREY, CA 93940
TELEPHONE (831) 641-7739
JOB NO. 23020.00

PLUMAS COUNTY
PRE-DESIGNED ADU
BUELLTON, CALIFORNIA

TITLE SHEET

MECHANICAL & PLUMBING

NO.	DESCRIPTION	DATE
1	.	.
2		
3		
4		

ENGINEER BY:

DRAWN BY:

CHECKED BY:

SHEET NUMBER

MPO.1

SHEET OF

THE USE OF THESE PLANS AND SPECIFICATIONS IS RESTRICTED TO THE ORIGINAL SITE FOR WHICH THEY WERE PREPARED, AND PUBLICATION THEREOF IS EXPRESSLY LIMITED TO SUCH USE, RE-USE, REPRODUCTION OR PUBLICATION BY ANY METHOD IN WHOLE OR IN PART IS PROHIBITED. TITLE TO THE PLANS AND SPECIFICATIONS REMAINS WITH THE ENGINEER AND VISUAL CONTACT WITH THEM CONSTITUDES PRIMA FACIE EVIDENCE OF THE ACCEPTANCE OF THESE RESTRICTIONS.

OUTDOOR UNIT SCHEDULE

CODE	MFR.	MODEL	EFFICIENCY	REFR	V/PH	MCA	MOCP	WT.	HT. W/O	CRTS.	EQUIP.	COMMENTS
			SEER					(LBS)	LEVELING		SERVED	
OU-1	MITSUBISHI	MXZ-2C20NA4	20	R410A	208/1	17.2	20	126	27-15/16	TSTAT.	IU-1	
OU-2	MITSUBISHI	MXZ-3C24NA4	20	R410A	208/1	22.1	25	142	38-31/32	TSTAT.	IU-1,2	

FAN/ENERGY RECOVER VENTILATOR SCHEDULE

CODE	MFR	MODEL	CFM	ESP (in)	BHP	V/PH	HT. W/O	WEIGHT	AREAS SERVED	SONES	COMMENTS
							ISOLATORS	(LBS)			
ERV-1	PANASONIC	FV-10VEC2	100	0.4	81W	120/1	8-7/8"	56.9	BATHROOMS		1,2
EF-1	PANASONIC	FV-05 11VFC1	80	0.25	9.4W	120/1	7"	9.5	TYPE C,D BATH	0.8	1
NOTES:	1. CONTROLLED BY HUMIDISTAT. ADD OVERRIDE SWITCH; COORDINATE LOCATION W/ ARCHITECT.										
	2. PROVIDES WHOLE HOUSE VENTILATION. TO RUN 24/7.										

PLUMBING FIXTURE SCHEDULE

CODE	DESCRIPTION	ACCESSIBLE	MOUNTING TYPE			MIN. ROUGH-IN CONN (IN)				LOCATION	REMARKS
			FLOOR	COUNTER TOP	WALL	W	V	CW	HW		
HB-1	HOSE BIB	–	–	–	•	–	–	1/2	–	OUTSIDE	2.2 GPM
CWB-1	CLOTHES WASHER	–	–	–	•	2	1 1/2	1/2	1/2	LAUNDRY	W/ WHA
SK-1	KITCHEN SINK	–	–	•	–	2	1 1/2	1/2	1/2	KITCHEN	1.8 GPM
L-1	LAVATORY	–	–	–	•	2	1 1/2	1/2	1/2	BATHROOM	1.2 GPM
BT-1	BATHTUB	–	•	–	–	2	1 1/2	–	–	BATHROOM	1.8 GPM SHOWERHEAD
WC-1	WATER CLOSET	–	–	•	–	3	2	1	–	BATHROOM	1.28 GPF

WATER HEATER SCHEDULE

CODE	LOCATION	SERVICE	FUEL TYPE	TANK	GPH @ F	ELECTRICAL			WEIGHT	HEIGHT	PART	MFG	REMARKS
			INPUT	CAPACITY	RISE	H.P.	VOLT	PH	(LBS)	(IN)	NO.		
EWH-1	STORAGE ROOM	DHW	2 KW	6	8.00	--	120	1	32	15.5	DEL 6	A.O.SMITH	FULL WARRANTY

NOT FOR CONSTRUCTION

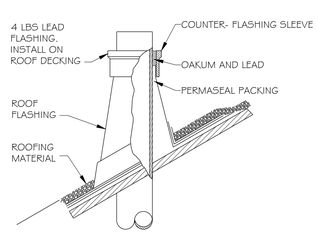

2 MPO.2 VENT THROUGH ROOF
NO SCALE SEE PLAN VIEW

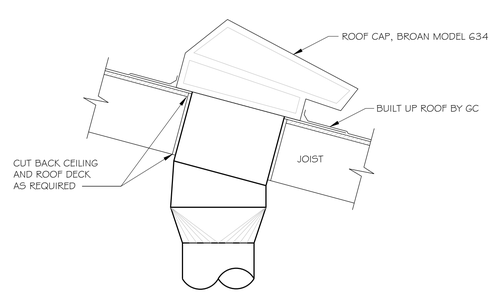

1 MPO.2 ROOF CAP (DRYER)
NO SCALE

BY USING THESE PRE-DESIGNED ADU PLANS, THE RECIPIENT IS ACKNOWLEDGING ACCEPTANCE OF THE FOLLOWING CONDITIONS.

1. THE USE OF THIS INFORMATION IS RESTRICTED TO THE ORIGINAL PROJECT FOR WHICH IT WAS PREPARED FOR (THE PRE-DESIGNED ADU PLANS FOR THE COUNTY OF MONTEREY, CALIFORNIA). THIS DOES NOT ELIMINATE OR REDUCE THE RECIPIENT'S RESPONSIBILITY TO VERIFY ANY AND ALL INFORMATION RELEVANT TO THE RECIPIENT'S WORK AND RESPONSIBILITY ON THIS PROJECT. WORKBENCH AND/OR THE JURISDICTIONS LISTED ABOVE SHALL NOT BE RESPONSIBLE FOR TRANSLATION ERRORS.

2. THE RECIPIENT RECOGNIZES AND ACKNOWLEDGES THAT THE USE OF THIS INFORMATION WILL BE AT THEIR SOLE RISK AND WITHOUT ANY LIABILITY OR LEGAL EXPOSURE TO WORKBENCH OR CITIES STATED ABOVE. NO WARRANTIES OF ANY NATURE, WHETHER EXPRESS OR IMPLIED, SHALL ATTACH TO THESE DOCUMENTS AND THE INFORMATION CONTAINED THERON. ANY USE, REUSE, OR ALTERATION OF THESE DOCUMENTS BY THE RECIPIENT OR BY OTHERS WILL BE AT THE RECIPIENT'S RISK AND FULL LEGAL RESPONSIBILITY. FURTHERMORE, THE RECIPIENT WILL, TO THE FULLEST EXTENT PERMITTED BUY LAW, INDEMNIFY AND HOLD WORKBENCH AND THE CITIES STATED ABOVE HARMLESS FROM ANY AND ALL CLAIMS, SUITS, LIABILITY, DEMANDS, JUDGEMENTS, OR COSTS ARISING OUT OF OR RESULTING THERE FROM ON ACCOUNT OF ANY INJURY, DEATH, DAMAGE OR LOSS TO PERSONS OR PROPERTY.

3. THE DESIGNS REPRESENTED BY THESE PLANS ARE COPYRIGHTED AND ARE SUBJECT TO COPYRIGHT PROTECTION. IF THE RECIPIENT DOES NOT AGREE WITH THE ABOVE CONDITIONS, DO NOT PROCEED BEYOND THIS DISCLAIMER.

ZAL ENGINEERING
MECHANICAL CONSULTANTS
99 PACIFIC ST, STE 375G
MONTEREY, CA 93940
TELEPHONE (831) 641-7739
JOB NO. 23020.00

PLUMAS COUNTY
PRE-DESIGNED ADU
BUELLTON, CALIFORNIA

SCHEDULES
DETAILS
MECHANICAL &
PLUMBING

NO.	DESCRIPTION	DATE
1	.	.
2		
3		
4		

ENGINEER BY:
DRAWN BY:
CHECKED BY:
SHEET NUMBER
MPO.2
SHEET OF

THE USE OF THESE PLANS AND SPECIFICATIONS IS RESTRICTED TO THE ORIGINAL SITE FOR WHICH THEY WERE PREPARED, AND PUBLICATION THEREOF IS EXPRESSLY LIMITED TO SUCH USE. RE-USE, REPRODUCTION OR PUBLICATION BY ANY METHOD IN WHOLE OR IN PART IS PROHIBITED. TITLE TO THE PLANS AND SPECIFICATIONS REMAINS WITH THE ENGINEER AND VISUAL CONTACT WITH THEM CONSTITUDES PRIMA FACIE EVIDENCE OF THE ACCEPTANCE OF THESE RESTRICTIONS.

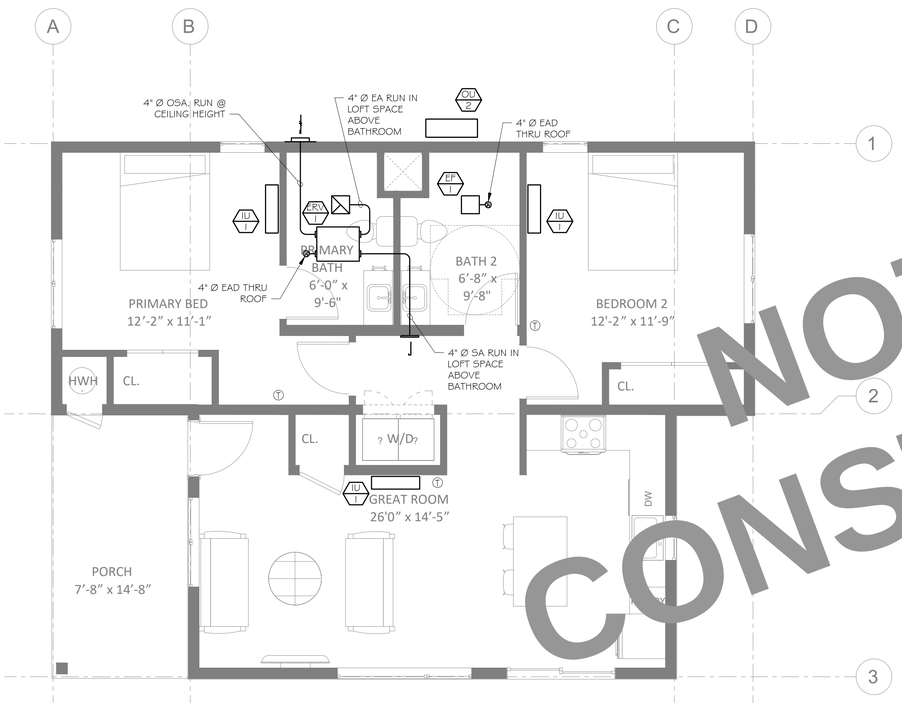

2 MP2.3 FLOOR PLAN - TWO BEDROOM - NEW MECHANICAL

SCALE: 1/4"= 1'-0"

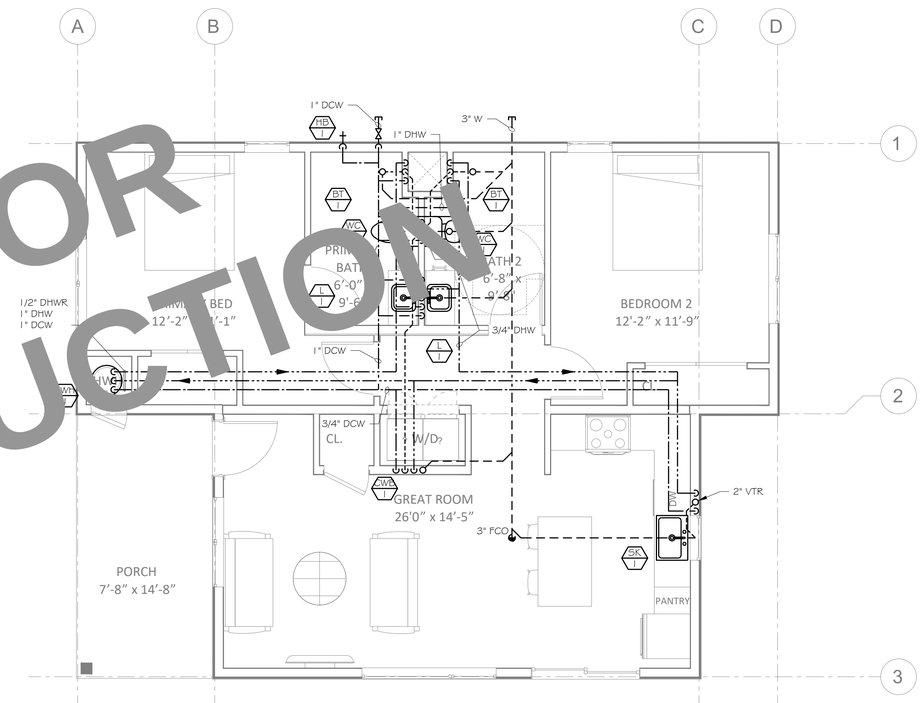

1 MP2.3 FLOOR PLAN - TWO BEDROOM - NEW PLUMBING

SCALE: 1/4"= 1'-0"

NOT FOR CONSTRUCTION

ZAL ENGINEERING

ZAL ENGINEERING
MECHANICAL CONSULTANTS
99 PACIFIC ST, STE 375G
MONTEREY, CA 93940
TELEPHONE (831) 641-7739
JOB NO. 23020.00

PLUMAS COUNTY PRE-DESIGNED ADU

BUELLTON, CALIFORNIA

TYPE C
TWO BEDROOM
SUMMIT
MECH & PLBG

NO.	DESCRIPTION	DATE
1	.	.
2		
3		
4		

ENGINEER BY:

DRAWN BY:

CHECKED BY:

SHEET NUMBER

MP2.3

SHEET OF

THE USE OF THESE PLANS AND SPECIFICATIONS IS RESTRICTED TO THE ORIGINAL SITE FOR WHICH THEY WERE PREPARED, AND PUBLICATION THEREOF IS EXPRESSLY LIMITED TO SUCH USE. RE-USE, REPRODUCTION OR PUBLICATION BY ANY METHOD IN WHOLE OR IN PART IS PROHIBITED. TITLE TO THE PLANS AND SPECIFICATIONS REMAINS WITH THE ENGINEER, AND VISUAL CONTACT WITH THEM CONSTITUTES PRIMA FACIE EVIDENCE OF THE ACCEPTANCE OF THESE RESTRICTIONS.

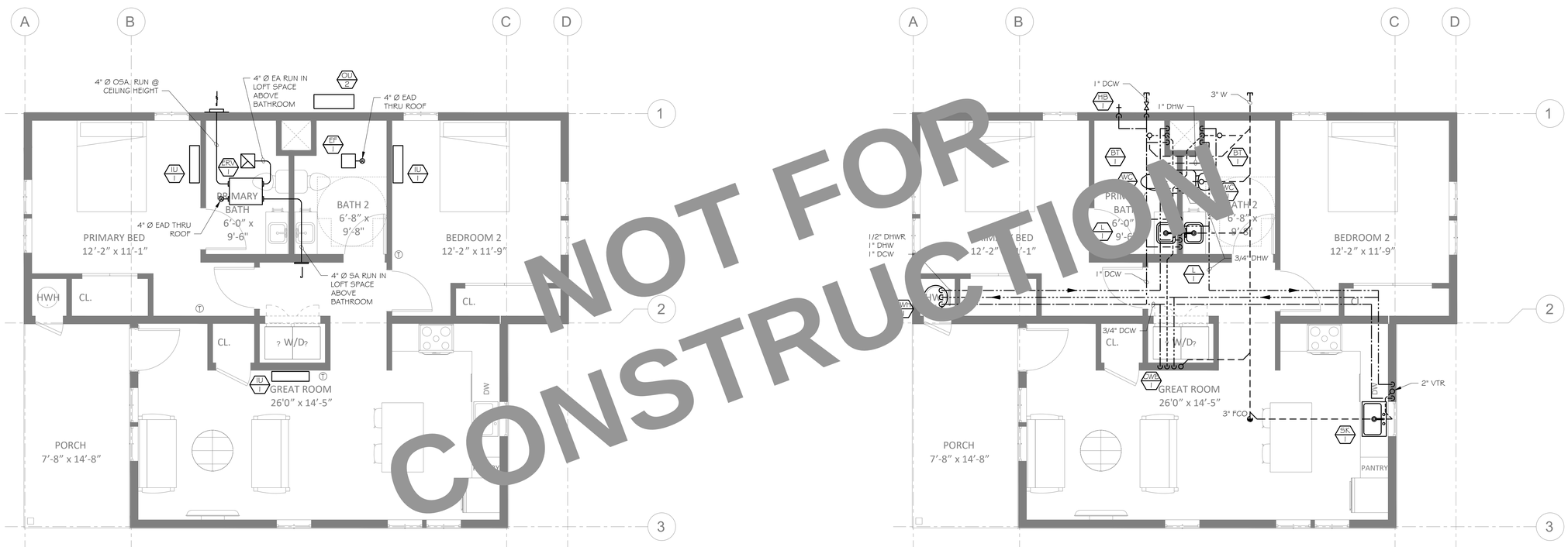

NOT FOR CONSTRUCTION

2 MP2.3 FLOOR PLAN - TWO BEDROOM - NEW MECHANICAL
SCALE: 1/4" = 1'-0"

1 MP2.3 FLOOR PLAN - TWO BEDROOM - NEW PLUMBING
SCALE: 1/4" = 1'-0"

0 1 2 4 8
SCALE: 1/4" = 1'-0"

ZAL ENGINEERING
MECHANICAL CONSULTANTS
99 PACIFIC ST, STE 375G
MONTEREY, CA 93940
TELEPHONE (831) 641-7739
JOB NO. 23020.00

PLUMAS COUNTY PRE-DESIGNED ADU

BUELLTON, CALIFORNIA

TYPE C
TWO BEDROOM
LAKESIDE
MECH & PLBG

NO.	DESCRIPTION	DATE
1	.	.
2		
3		
4		

ENGINEER BY:

DRAWN BY:

CHECKED BY:

SHEET NUMBER

MP2.3

SHEET OF

THE USE OF THESE PLANS AND SPECIFICATIONS IS RESTRICTED TO THE ORIGINAL SITE FOR WHICH THEY WERE PREPARED, AND PUBLICATION THEREOF IS EXPRESSLY LIMITED TO SUCH USE. RE-USE, REPRODUCTION OR PUBLICATION BY ANY METHOD IN WHOLE OR IN PART IS PROHIBITED. TITLE TO THE PLANS AND SPECIFICATIONS REMAINS WITH THE ENGINEER, AND VISUAL CONTACT WITH THEM CONSTITUTES PRIMA FACIE EVIDENCE OF THE ACCEPTANCE OF THESE RESTRICTIONS.

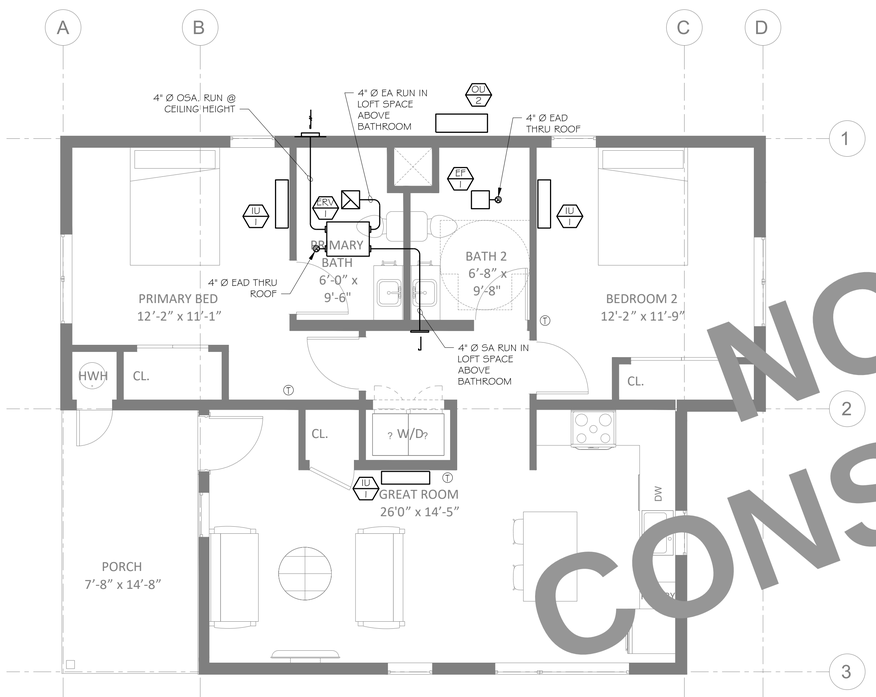

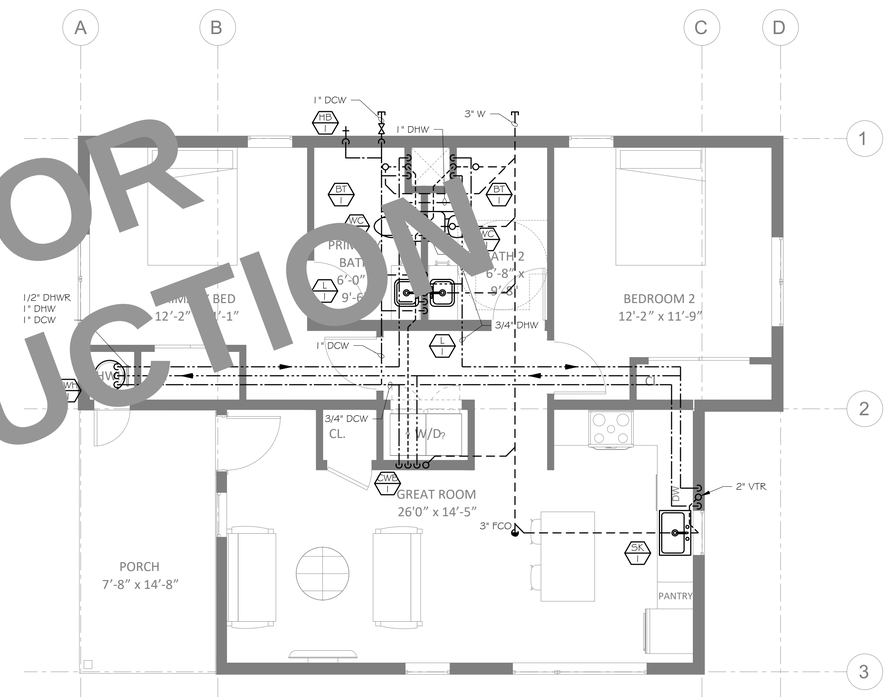

NOT FOR CONSTRUCTION

2 MP2.3 FLOOR PLAN - TWO BEDROOM - NEW MECHANICAL
SCALE: 1/4" = 1'-0"

1 MP2.3 FLOOR PLAN - TWO BEDROOM - NEW PLUMBING
SCALE: 1/4" = 1'-0"

0 1 2 4 8
SCALE: 1/4" = 1'-0"

ZAL ENGINEERING
MECHANICAL CONSULTANTS
99 PACIFIC ST, STE 375G
MONTEREY, CA 93940
TELEPHONE (831) 641-7739
JOB NO. 23020.00

PLUMAS COUNTY PRE-DESIGNED ADU

BUELLTON, CALIFORNIA

TYPE C
TWO BEDROOM
MEADOW
MECH & PLBG

NO.	DESCRIPTION	DATE
1	.	.
2		
3		
4		

ENGINEER BY:

DRAWN BY:

CHECKED BY:

SHEET NUMBER

MP2.3

SHEET OF

THE USE OF THESE PLANS AND SPECIFICATIONS IS RESTRICTED TO THE ORIGINAL SITE FOR WHICH THEY WERE PREPARED, AND PUBLICATION THEREOF IS EXPRESSLY LIMITED TO SUCH USE. RE-USE, REPRODUCTION OR PUBLICATION BY ANY METHOD IN WHOLE OR IN PART IS PROHIBITED. TITLE TO THE PLANS AND SPECIFICATIONS REMAINS WITH THE ENGINEER, AND VISUAL CONTACT WITH THEM CONSTITUTES PRIMA FACIE EVIDENCE OF THE ACCEPTANCE OF THESE RESTRICTIONS.

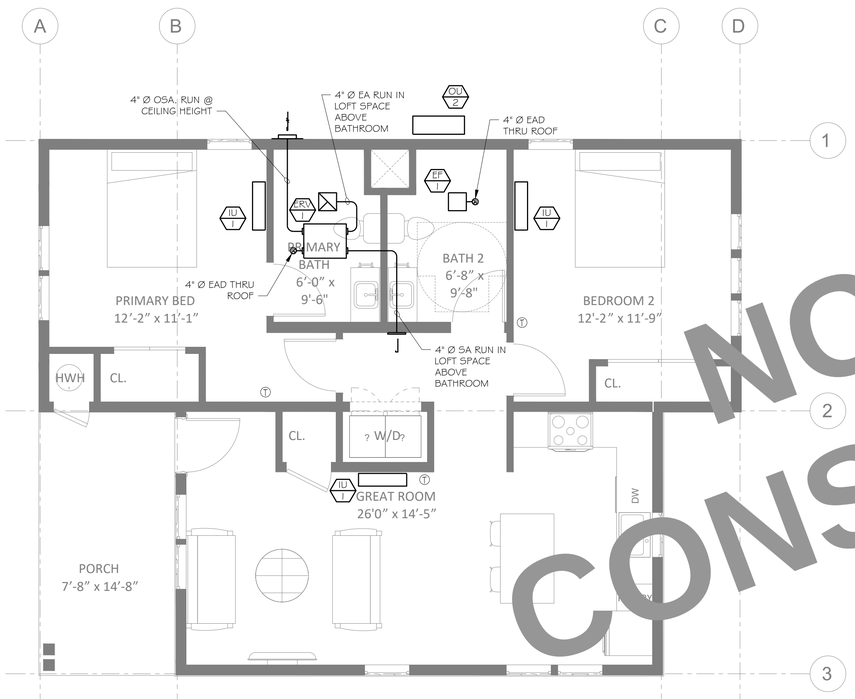

2 MP2.3 FLOOR PLAN - TWO BEDROOM - NEW MECHANICAL

SCALE: 1/4" = 1'-0"

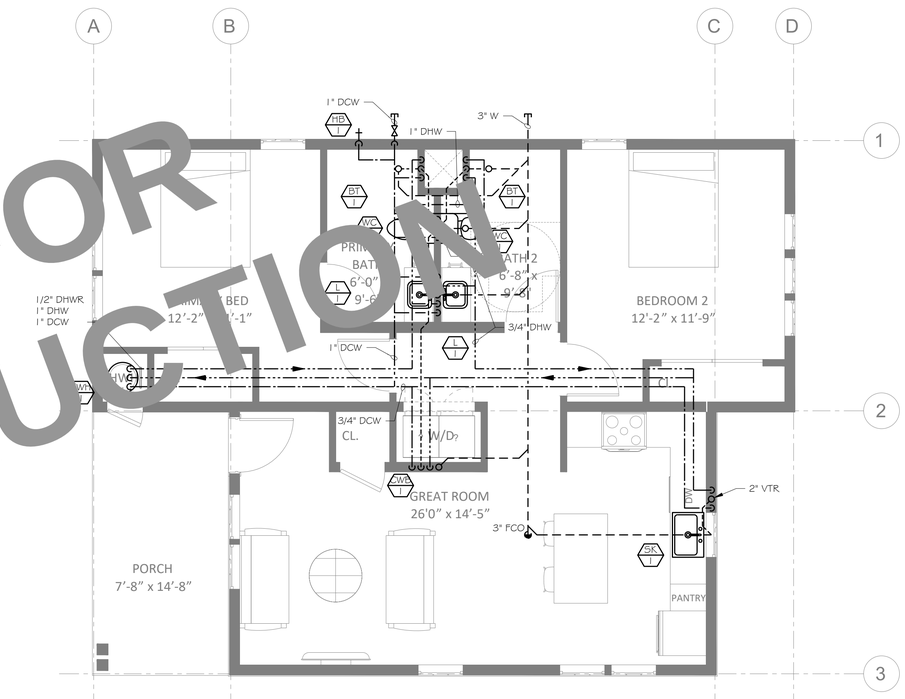

1 MP2.3 FLOOR PLAN - TWO BEDROOM - NEW PLUMBING

SCALE: 1/4" = 1'-0"

NOT FOR CONSTRUCTION

ZAL ENGINEERING
MECHANICAL CONSULTANTS
99 PACIFIC ST, STE 375G
MONTEREY, CA 93940
TELEPHONE (831) 641-7739
JOB NO. 23020.00

PLUMAS COUNTY PRE-DESIGNED ADU

BUELLTON, CALIFORNIA

TYPE C
TWO BEDROOM
GOLDRUSH
MECH & PLBG

NO.	DESCRIPTION	DATE
1	.	.
2		
3		
4		

ENGINEER BY:

DRAWN BY:

CHECKED BY:

SHEET NUMBER

MP2.3

SHEET OF

THE USE OF THESE PLANS AND SPECIFICATIONS IS RESTRICTED TO THE ORIGINAL SITE FOR WHICH THEY WERE PREPARED, AND PUBLICATION THEREOF IS EXPRESSLY LIMITED TO SUCH USE. RE-USE, REPRODUCTION OR PUBLICATION BY ANY METHOD IN WHOLE OR IN PART IS PROHIBITED. TITLE TO THE PLANS AND SPECIFICATIONS REMAINS WITH THE ENGINEER, AND VISUAL CONTACT WITH THEM CONSTITUTES PRIMA FACIE EVIDENCE OF THE ACCEPTANCE OF THESE RESTRICTIONS.

NOT FOR CONSTRUCTION

FENESTRATION / GLAZING

01	02	03	04	05	06	07	08	09	10	11	12	13	14
Name	Type	Surface	Orientation	Azimuth	Width (ft)	Height (ft)	Mult.	Area (ft²)	U-factor	U-factor Source	SHGC	SHGC Source	Exterior Shading
Window 7	Window	Rear Wall	Back	180			1	10	0.28	NFRC	0.35	NFRC	Bug Screen
Window 8	Window	Rear Wall 2	Back	180			1	6	0.28	NFRC	0.35	NFRC	Bug Screen
Window 9	Window	Rear Wall 3	Back	180			1	6	0.28	NFRC	0.35	NFRC	Bug Screen
Window 10	Window	Rear Wall 4	Back	180			1	10	0.28	NFRC	0.35	NFRC	Bug Screen
Window 11	Window	Lateral 2 Wall 2	Right	270			1	6.25	0.28	NFRC	0.35	NFRC	Bug Screen
Window 12	Window	Lateral 2 Wall 2	Right	270			1	10	0.28	NFRC	0.35	NFRC	Bug Screen
Window 13	Window	Lateral 2 Wall 2	Right	270			1	10	0.28	NFRC	0.35	NFRC	Bug Screen
Window 14	Window	Lateral 2 Wall 2	Right	270			1	6.25	0.28	NFRC	0.35	NFRC	Bug Screen

OPAQUE DOORS

01	02	03	04
Name	Side of Building	Area (ft²)	U-factor
Door	Lateral 1 Wall	20.25	0.5

OVERHANGS AND FINS

01	02	03	04	05	06	07	08	09	10	11	12	13	14
Window	Overhang					Left Fin				Right Fin			
	Depth	Dist Up	Left Extent	Right Extent	Flap Ht.	Depth	Top Up	Dist L	Bot Up	Depth	Top Up	Dist R	Bot Up
Window 3	0	0	0	0	0	7.67	0	4.58	0	0	0	0	0

OPAQUE SURFACES - CATHEDRAL CEILINGS

01	02	03	04	05	06	07	08	09	10	11
Name	Zone	Construction	Azimuth	Orientation	Area (ft²)	Skylight Area (ft²)	Roof Rise (x in 12)	Roof Reflectance	Roof Emittance	Cool Roof
Roof Rear	Undefined Zone	R-30 Roof No Attic	180	Back	40.06	0	8	0.1	0.85	No
Roof Rear 2	Undefined Zone	R-30 Roof No Attic	180	Back	177.68	0	8	0.1	0.85	No
Roof Rear 3	Undefined Zone	R-30 Roof No Attic	180	Back	55.43	0	8	0.1	0.85	No
Roof Rear 4	Undefined Zone	R-30 Roof No Attic	180	Back	60.35	0	8	0.1	0.85	No
Roof Rear 5	Undefined Zone	R-30 Roof No Attic	180	Back	144.92	0	8	0.1	0.85	No
Roof Front 3	Undefined Zone	R-30 Roof No Attic	0	Front	26.75	0	8	0.1	0.85	No

FENESTRATION / GLAZING

01	02	03	04	05	06	07	08	09	10	11	12	13	14
Name	Type	Surface	Orientation	Azimuth	Width (ft)	Height (ft)	Mult.	Area (ft²)	U-factor	U-factor Source	SHGC	SHGC Source	Exterior Shading
Window	Window	Front Wall	Front	0			1	25	0.28	NFRC	0.35	NFRC	Bug Screen
Window 2	Window	Front Wall	Front	0			1	12.5	0.28	NFRC	0.35	NFRC	Bug Screen
Window_Door	Window	Front Wall	Front	0			1	44.96	0.28	NFRC	0.35	NFRC	Bug Screen
Window 3	Window	Lateral 1 Wall	Left	90	5	4	1	20	0.28	NFRC	0.35	NFRC	Bug Screen
Window 4	Window	Lateral 2 Wall	Right	270			1	6.25	0.28	NFRC	0.35	NFRC	Bug Screen
Window 5	Window	Lateral 2 Wall	Right	270			1	10	0.28	NFRC	0.35	NFRC	Bug Screen
Window 6	Window	Lateral 1 Wall 2	Left	90			1	20	0.28	NFRC	0.35	NFRC	Bug Screen

ZONE INFORMATION

01	02	03	04	05	06	07
Zone Name	Zone Type	HVAC System Name	Zone Floor Area (ft²)	Avg. Ceiling Height	Water Heating System 1	Status
Undefined Zone	Conditioned	Undefined System1	869.56	8	DHW Sys 1	New

OPAQUE SURFACES

01	02	03	04	05	06	07	08
Name	Zone	Construction	Azimuth	Orientation	Gross Area (ft²)	Window and Door Area (ft2)	Tilt (deg)
Front Wall	Undefined Zone	R-21 Wall	0	Front	208.5	82.46	90
Lateral 1 Wall	Undefined Zone	R-21 Wall	90	Left	187.68	40.25	90
Lateral 2 Wall	Undefined Zone	R-21 Wall	270	Right	187.13	16.25	90
Front Wall 2	Undefined Zone	R-21 Wall	0	Front	33.22	0	90
Lateral 1 Wall 2	Undefined Zone	R-21 Wall	90	Left	178.69	20	90
Rear Wall	Undefined Zone	R-21 Wall	180	Back	97.33	10	90
Rear Wall 2	Undefined Zone	R-21 Wall	180	Back	40.67	6	90
Rear Wall 3	Undefined Zone	R-21 Wall	180	Back	40.67	6	90
Rear Wall 4	Undefined Zone	R-21 Wall	180	Back	97.33	10	90
Lateral 2 Wall 2	Undefined Zone	R-21 Wall	270	Right	146.05	32.5	90
Front Wall 3	Undefined Zone	R-21 Wall	0	Front	30.67	0	90

OPAQUE SURFACES - CATHEDRAL CEILINGS

01	02	03	04	05	06	07	08	09	10	11
Name	Zone	Construction	Azimuth	Orientation	Area (ft²)	Skylight Area (ft²)	Roof Rise (x in 12)	Roof Reflectance	Roof Emittance	Cool Roof
Roof Front	Undefined Zone	R-30 Roof No Attic	0	Front	350.59	0	8	0.1	0.85	No
Roof Front 2	Undefined Zone	R-30 Roof No Attic	0	Front	13.78	0	8	0.1	0.85	No

REQUIRED PV SYSTEMS

01	02	03	04	05	06	07	08	09	10	11	12
DC System Size (kWdc)	Exception	Module Type	Array Type	Power Electronics	CFI	Azimuth (deg)	Tilt Input	Array Angle (deg)	Tilt: (x in 12)	Inverter Eff. (%)	Annual Solar Access (%)
2.05	NA	Standard (14-17%)	Fixed	none	true	150-270	n/a	n/a	<=7:12	96	98

REQUIRED SPECIAL FEATURES

The following are features that must be installed as condition for meeting the modeled energy performance for this computer analysis.

- Indoor air quality, balanced fan
- IAQ Ventilation System: as low as 0.375 W/CFM
- IAQ Ventilation System Heat Recovery: minimum 80 SRE and 83 ASRE
- IAQ Ventilation System: supply outside air inlet, filter, and H/ERV cores accessible per RACM Reference Manual
- IAQ Ventilation System: fault indicator display
- Window overhangs and/or fins
- Compact distribution system basic credit
- Recirculating with demand control, occupancy/motion sensor
- Northwest Energy Efficiency Alliance (NEEA) rated heat pump water heater; specific brand/model, or equivalent, must be installed

HERS FEATURE SUMMARY

The following is a summary of the features that must be field-verified by a certified HERS Rater as a condition for meeting the modeled energy performance for this computer analysis. Additional detail is provided in the building tables below. Registered CF2Rs and CF3Rs are required to be completed in the HERS Registry

- Indoor air quality ventilation
- Kitchen range hood
- Verified Refrigerant Charge
- Verified heat pump rated heating capacity

BUILDING - FEATURES INFORMATION

01	02	03	04	05	06	07
Project Name	Conditioned Floor Area (ft²)	Number of Dwelling Units	Number of Bedrooms	Number of Zones	Number of Ventilation Cooling Systems	Number of Water Heating Systems
Type C Summit	869.56	1	2	1	0	1

ENERGY USE INTENSITY

	Standard Design (kBtu/ft² - yr)	[illegible]sign (kBtu/ft[illegible]	Compliance Ma[illegible]Btu/ft[illegible]	Marg[illegible]ercentage
North Facing				
Gross EUI[1]	[illegible]	[illegible]	[illegible]2	28.71
Net EUI[2]	27.39	15.77	11.62	42.42
East Facin[illegible]				
Gross EUI[1]	[illegible].48	28.5	11.98	29[illegible]
Net EUI[2]	[illegible]9	15.41	11.98	43.7[illegible]
Sou[illegible]ing				
[illegible]oss EUI[1]	40.48	28.18	[illegible]	30.39
Net EUI[illegible]	27.39	15.09	12[illegible]	44.91
[illegible]t Facing				
Gross EUI[1]	[illegible]	[illegible]3.6	11.88	29.35
Net EUI[2]	27.39	15.51	11.88	43.37

Notes
1. Gross E[illegible] (not including [illegible]tal Building Area
2. Net [illegible]ergy Use Total (including PV) / To[illegible]ding Area.

ENERGY USE SUMMARY

Energy Use	Standard Design S[illegible] [illegible]DR1) (kBtu/f[illegible]	Standard Design TDV Energy (EDR2) (kTDV/ft² -yr)	Proposed Design Source Energy (EDR1) (kBtu/ft² -yr)	Proposed Design TDV Energy (EDR2) (kTDV/ft² -yr)	Compliance Margin (EDR1)	Compliance Margin (EDR2)
S[illegible]ating	[illegible]	129.79	8.84	96.33	10.46	33.46
[illegible]pace Co[illegible]	0.3[illegible]	3.79	0.32	4.13	-0.01	-0.34
IAQ Ventilatio[illegible]	0.97	10.52	0.77	8.32	0.2	2.2
Water Heating	[illegible].6	47.75	1.97	24.85	1.63	22.9
Self [illegible]ization/Flexi[illegible]				0		0
South Facing Efficiency Compliance Total	**24.18**	**191.85**	**11.9**	**133.63**	**12.28**	**58.22**
Space Heating	19.3	129.79	9.07	98.7	10.23	31.09
Space Cooling	0.31	3.79	0.4	4.68	-0.09	-0.89
IAQ Ventilation	0.97	10.52	0.77	8.32	0.2	2.2
Water Heating	3.6	47.75	1.97	24.86	1.63	22.89
Self Utilization/Flexibility Credit				0		0
West Facing Efficiency Compliance Total	**24.18**	**191.85**	**12.21**	**136.56**	**11.97**	**55.29**

ENERGY USE SUMMARY

Energy Use	Standard Design Source Energy (EDR1) (kBtu/ft² -yr)	Standard Design TDV Energy (EDR2) (kTDV/ft² -yr)	Proposed Design Source Energy (EDR1) (kBtu/ft² -yr)	Proposed Design TDV Energy (EDR2) (kTDV/ft² -yr)	Compliance Margin (EDR1)	Compliance Margin (EDR2)
Space Heating	19.3	129.79	9.44	102.47	9.86	27.32
Space Cooling	0.31	3.79	0.29	3.55	0.02	0.24
IAQ Ventilation	0.97	10.52	0.77	8.32	0.2	2.2
Water Heating	3.6	47.75	1.98	24.91	1.62	22.84
Self Utilization/Flexibility Credit				0		0
North Facing Efficiency Compliance Total	**24.18**	**191.85**	**12.48**	**139.25**	**11.7**	**52.6**
Space Heating	19.3	129.79	9.2	99.32	10.1	30.47
Space Cooling	0.31	3.79	0.31	4.16	0	-0.37
IAQ Ventilation	0.97	10.52	0.77	8.32	0.2	2.2
Water Heating	3.6	47.75	1.97	24.86	1.63	22.89
Self Utilization/Flexibility Credit				0		0
East Facing Efficiency Compliance Total	**24.18**	**191.85**	**12.25**	**136.66**	**11.93**	**55.19**

ENERGY DESIGN RATINGS

	Energy Design Ratings			Compliance Margins		
	Source Energy (EDR1)	Efficiency[1] EDR (EDR2efficiency)	Total[2] EDR (EDR2total)	Source Energy (EDR1)	Efficiency[1] EDR (EDR2efficiency)	Total[2] EDR (EDR2total)
Standard Design	46.8	56.2	47.6			
Proposed Design						
North Facing	29.9	40.8	37.3	16.9	15.4	10.3
East Facing	29.6	40	36.8	17.2	16.2	10.8
South Facing	29.1	39.1	36.2	17.7	17.1	11.4
West Facing	29.5	40	36.7	17.3	16.2	10.9

RESULT[3]: PASS

[1]Efficiency EDR includes improvements like a better building envelope and more efficient equipment
[2]Total EDR includes efficiency and demand response measures such as photovoltaic (PV) system and batteries
[3]Building complies when source energy, efficiency and total compliance margins are greater than or equal to zero and unmet load hour limits are not exceeded

- Standard Design PV Capacity: 2.05 kWdc
- Proposed PV Capacity Scaling: North (2.05 kWdc) East (2.05 kWdc) South (2.05 kWdc) West (2.05 kWdc)

GENERAL INFORMATION

01	Project Name	Type C Summit			
02	Run Title	Title 24 Analysis			
03	Project Location	_			
04	City		05	Standards Version	2022
06	Zip code		07	Software Version	EnergyPro 9.0
08	Climate Zone	16	09	Front Orientation (deg/ Cardinal)	All orientations
10	Building Type	Single family	11	Number of Dwelling Units	1
12	Project Scope	Newly Constructed	13	Number of Bedrooms	2
14	Addition Cond. Floor Area (ft²)	0	15	Number of Stories	1
16	Existing Cond. Floor Area (ft²)	n/a	17	Fenestration Average U-factor	0.28
18	Total Cond. Floor Area (ft²)	869.56	19	Glazing Percentage (%)	23.40%
20	ADU Bedroom Count	n/a			

COMPLIANCE RESULTS

01	Building Complies with Computer Performance
02	This building incorporates features that require field testing and/or verification by a certified HERS rater under the supervision of a CEC-approved HERS provider.
03	This building incorporates one or more Special Features shown below

ZAL ENGINEERING

ZAL
ENGINEERING
MECHANICAL CONSULTANTS
99 PACIFIC ST, STE 375G
MONTEREY, CA 93940
TELEPHONE (831) 641-7739
JOB NO. 23020.00

PLUMAS COUNTY
PRE-DESIGNED ADU
BUELLTON, CALIFORNIA

T24 FORMS
TYPE C
SUMMIT

NO.	DESCRIPTION	DATE
1	.	.
2		
3		
4		

ENGINEER BY:
DRAWN BY:
CHECKED BY:

SHEET NUMBER
T24.17
SHEET OF

THE USE OF THESE PLANS AND SPECIFICATIONS IS RESTRICTED TO THE ORIGINAL SITE FOR WHICH THEY WERE PREPARED, AND PUBLICATION THEREOF IS EXPRESSLY LIMITED TO SUCH USE. RE-USE, REPRODUCTION OR PUBLICATION BY ANY METHOD IN WHOLE OR IN PART IS PROHIBITED. TITLE TO THE PLANS AND SPECIFICATIONS REMAINS WITH THE ENGINEER AND VISUAL CONTACT WITH THEM CONSTITUTES PRIMA FACIE EVIDENCE OF THE ACCEPTANCE OF THESE RESTRICTIONS.

NOT FOR CONSTRUCTION

CERTIFICATE OF COMPLIANCE - RESIDENTIAL PERFORMANCE COMPLIANCE METHOD **CF1R-PRF-01-E**

Project Name: Type C Summit **Calculation Date/Time:** 2023-09-23T00:26:51+02:00 **(Page 14 of 14)**

Calculation Description: Title 24 Analysis **Input File Name:** Type_C_Summit.ribd22x

DOCUMENTATION AUTHOR'S DECLARATION STATEMENT

1. I certify that this Certificate of Compliance documentation is accurate and complete.

Documentation Author Name: Jaime Zaldivar	Documentation Author Signature:
Company: ZAL Engineering	Signature Date: 2023-09-27
Address: 99 Pacific St, Ste 375G	CEA/ HERS Certification Identification (If applicable): M37306
City/State/Zip: Monterey, CA 93940	Phone: 831-641-7739

RESPONSIBLE PERSON'S DECLARATION STATEMENT

I certify the following under penalty of perjury, under the laws of the State of California:

1. I am eligible under Division 3 of the Business and Professions Code to accept responsibility for the building design identified on this Certificate of Compliance.
2. I certify that the energy efficiency features and performance specifications identified on this Certificate of Compliance conform to the requirements of Title 24, Part 1 and Part 6 of the California Code of Regulations.
3. The building design features or system design features identified on this Certificate of Compliance are consistent with the information provided on other applicable compliance documents, worksheets, calculations, plans and specifications submitted to the enforcement agency for approval with this building permit application.

Responsible Person's Name: Jaime Zaldivar	Responsible Person's Signature:
Company: ZAL Engineering	Date/Time: 2023-09-27 08:12:54
Address: 99 Pacific St, Ste 375G	License Type: M37306
City/State/Zip: Monterey, CA 93940	Phone: 831-641-7739

This report is digitally signed by CalCERTS. This digital signature is provided in order to secure the content of this registered document, and in no way implies Certification Provider responsibility for the accuracy of the information.

Easy to Verify at CalCERTS.com

CERTIFICATE OF COMPLIANCE - RESIDENTIAL PERFORMANCE COMPLIANCE METHOD **CF1R-PRF-01-E**

Project Name: Type C Summit **Calculation Date/Time:** 2023-09-23T00:26:51+02:00 **(Page 13 of 14)**

Calculation Description: Title 24 Analysis **Input File Name:** Type_C_Summit.ribd22x

HVAC HEAT PUMPS - HERS VERIFICATION

01	02	03	04	05	06	07	08	09
Name	Verification	Airflow Test	Verified EER/EER2	Verified SEER/SEER2	Verified Refrigerant Charge	Verified HSPF/HSPF2	Verified Heating Cap 47	Verified Heating Cap 17
1-hers-htpump	Not Required	0	Not Required	Not Required	Yes	No	Yes	Yes

INDOOR AIR QUALITY AND FANS

01	02	03	04	05	06	07	08	09
Ventilation Unit	Airflow (CFM)	Fan Efficacy (W/CFM)	IAQ Fan Type	Includes Heat/Energy Recovery?	IAQ Recovery Effectiveness - SRE	Includes Fault Indicator Display?	HERS Verification	Status
SFam IAQVentRpt 1-1	80	0.375	Balanced	Yes	83	No	Yes	

CERTIFICATE OF COMPLIANCE - RESIDENTIAL PERFORMANCE COMPLIANCE METHOD **CF1R-PRF-01-E**

Project Name: Type C Summit **Calculation Date/Time:** 2023-09-23T00:26:51+02:00 **(Page 12 of 14)**

Calculation Description: Title 24 Analysis **Input File Name:** Type_C_Summit.ribd22x

WATER HEATING - COMPACT DISTRIBUTION

01	02	03	04	05	06	07
Dwelling Unit type	Water Heating System Name	Master Bath distance of furthest fixture to Water Heater (ft)	Kitchen distance of furthest fixture to Water Heater (ft)	Furthest Third furthest fixture to Water Heater (ft)	Compactness Factor	HERS Verification
Dwelling	DHW Sys 1	n/a	n/a	n/a	0.7	n/a

WATER HEATING - HERS VERIFICATION

01	02	03	04	05	06	07
Name	Pipe Insulation	Parallel Piping	Compact Distribution	Compact Distribution Type	Recirculation Control	Shower Drain Water Heat Recovery
DHW Sys 1 - 1/1	Not Required	Not Required	Not Required	Basic	Not Required	Not Required

SPACE CONDITIONING SYSTEMS

01	02	03	04	05	06	07	08	09
Name	System Type	Heating Unit Name	Heating Equipment Count	Cooling Unit Name	Cooling Equipment Count	Fan Name	Distribution Name	Required Thermostat Type
Undefined System1	Heat pump heating cooling	Heat Pump System 1	1	Heat Pump System 1	1	n/a	n/a	Setback

HVAC - HEAT PUMPS

01	02	03	04	05	06	07	08	09	10	11	12	13
			Heating				Cooling					
Name	System Type	Number of Units	Efficiency Type	HSPF / HSPF2 / COP	Cap 47	Cap 17	Efficiency Type	SEER / SEER2	EER / EER / CEER	Zonally Controlled	Compressor Type	HERS Verification
Heat Pump System 1	Ductless MiniSplit HP	1	HSPF2	10	30600	21000	EER2SEER2	20	13.6	Not Zonal	Single Speed	Heat Pump System 1-hers-htpump

CERTIFICATE OF COMPLIANCE - RESIDENTIAL PERFORMANCE COMPLIANCE METHOD **CF1R-PRF-01-E**

Project Name: Type C Summit **Calculation Date/Time:** 2023-09-23T00:26:51+02:00 **(Page 11 of 14)**

Calculation Description: Title 24 Analysis **Input File Name:** Type_C_Summit.ribd22x

BUILDING ENVELOPE - HERS VERIFICATION

01	02	03	04	05
Quality Insulation Installation (QII)	High R-value Spray Foam Insulation	Building Envelope Air Leakage	CFM50	CFM50
Not Required	Not Required	N/A	n/a	n/a

WATER HEATING SYSTEMS

01	02	03	04	05	06	07	08	09
Name	System Type	Distribution Type	Water Heater Name	Number of Units	Solar Heating System	Compact Distribution	HERS Verification	Water Heater Name (#)
DHW Sys 1	Domestic Hot Water (DHW)	Demand Recirculation Sensor Controls	DHW Heater 1	1	n/a	Basic	n/a	DHW Heater 1 (1)

WATER HEATERS - NEEA HEAT PUMP

01	02	03	04	05	06	07	08
Name	# of Units	Tank Vol. (gal)	NEEA Heat Pump Brand	NEEA Heat Pump Model	Tank Location	Duct Inlet Air Source	Duct Outlet Air Source
DHW Heater 1	1	40	Rheem	RheemXE40T10H22U0	Undefined Zone	Undefined Zone	Undefined Zone

RECIRCULATION LOOPS

01	02	03	04	05
Water Heating System Name	Number of Recirculation Loops	Loop Insulation Thickness (in)	Recirculation Loop Location	Recirculation Pump Power (W)
DHW Sys 1	1	1.5	Conditioned	0

CERTIFICATE OF COMPLIANCE - RESIDENTIAL PERFORMANCE COMPLIANCE METHOD **CF1R-PRF-01-E**

Project Name: Type C Summit **Calculation Date/Time:** 2023-09-23T00:26:51+02:00 **(Page 10 of 14)**

Calculation Description: Title 24 Analysis **Input File Name:** Type_C_Summit.ribd22x

SLAB FLOORS

01	02	03	04	05	06	07	08
Name	Zone	Area (ft^2)	Perimeter (ft)	Edge Insul. R-value and Depth	Edge Insul. R-value and Depth	Carpeted Fraction	Heated
Slab-on-Grade	Undefined Zone	350.59	54.33	none	0	80%	No
Slab-on-Grade 2	Undefined Zone	53.84	0.1	none	0	80%	No
Slab-on-Grade 3	Undefined Zone	177.68	27.58	none	0	80%	No
Slab-on-Grade 4	Undefined Zone	55.43	5.08	none	0	80%	No
Slab-on-Grade 5	Undefined Zone	60.35	5.08	none	0	80%	No
Slab-on-Grade 6	Undefined Zone	171.67	30.08	none	0	80%	No

OPAQUE SURFACE CONSTRUCTIONS

01	02	03	04	05	06	07	08
Construction Name	Surface Type	Construction Type	Framing	Total Cavity R-value	Interior / Exterior Continuous R-value	U-factor	Assembly Layers
R-21 Wall	Exterior Walls	Wood Framed Wall	2x6 @ 16 in. O. C.	R-21	5 / None	0.048	Inside Finish: Gypsum Board Sheathing / Insulation: R-5 Sheathing Cavity / Frame: R-21 / 2x6 Exterior Finish: 3 Coat Stucco
R-30 Roof No Attic	Cathedral Ceilings	Wood Framed Ceiling	2x12 @ 16 in. O. C.	R-30	None / None	0.036	Roofing: Light Roof (Asphalt Shingle) Roof Deck: Wood Siding/sheathing/decking Cavity / Frame: R-30 / 2x12 Inside Finish: Gypsum Board

ZAL ENGINEERING

ZAL ENGINEERING
MECHANICAL CONSULTANTS
99 PACIFIC ST, STE 375G
MONTEREY, CA 93940
TELEPHONE (831) 641-7739
JOB NO. 23020.00

PLUMAS COUNTY
PRE-DESIGNED ADU
BUELLTON, CALIFORNIA

T24 FORMS
TYPE C
SUMMIT

NO.	DESCRIPTION	DATE
1	.	.
2		
3		
4		

ENGINEER BY:

DRAWN BY:

CHECKED BY:

SHEET NUMBER

T24.18

SHEET OF

THE USE OF THESE PLANS AND SPECIFICATIONS IS RESTRICTED TO THE ORIGINAL SITE FOR WHICH THEY WERE PREPARED, AND PUBLICATION THEREOF IS EXPRESSLY LIMITED TO SUCH USE. RE-USE, REPRODUCTION OR PUBLICATION BY ANY METHOD IN WHOLE OR IN PART IS PROHIBITED. TITLE TO THE PLANS AND SPECIFICATIONS REMAINS WITH THE ENGINEER AND VISUAL CONTACT WITH THEM CONSTITUDES PRIMA FACIE EVIDENCE OF THE ACCEPTANCE OF THESE RESTRICTIONS.

CERTIFICATE OF COMPLIANCE - RESIDENTIAL PERFORMANCE COMPLIANCE METHOD **CF1R-PRF-01-E**

Project Name: Type C Lakeside **Calculation Date/Time:** 2023-09-23T00:15:01+02:00 **(Page 9 of 14)**

Calculation Description: Title 24 Analysis **Input File Name:** Type_C_Lakeside.ribd22x

FENESTRATION / GLAZING

01	02	03	04	05	06	07	08	09	10	11	12	13	14
Name	Type	Surface	Orientation	Azimuth	Width (ft)	Height (ft)	Mult.	Area (ft^2)	U-factor	U-factor Source	SHGC	SHGC Source	Exterior Shading
Window 8	Window	Lateral 1 Wall 2	Left	90			1	10	0.28	NFRC	0.35	NFRC	Bug Screen
Window 9	Window	Lateral 1 Wall 2	Left	90			1	10	0.28	NFRC	0.35	NFRC	Bug Screen
Window 10	Window	Rear Wall	Back	180			1	10	0.28	NFRC	0.35	NFRC	Bug Screen
Window 11	Window	Rear Wall 2	Back	180			1	6	0.28	NFRC	0.35	NFRC	Bug Screen
Window 12	Window	Rear Wall 3	Back	180			1	6	0.28	NFRC	0.35	NFRC	Bug Screen
Window 13	Window	Rear Wall 4	Back	180			1	10	0.28	NFRC	0.35	NFRC	Bug Screen
Window 14	Window	Lateral 2 Wall 2	Right	270			1	10	0.28	NFRC	0.35	NFRC	Bug Screen
Window 15	Window	Lateral 2 Wall 2	Right	270			1	10	0.28	NFRC	0.35	NFRC	Bug Screen

OPAQUE DOORS

01	02	03	04
Name	Side of Building	Area (ft^2)	U-factor
Door	Lateral 1 Wall	20.25	0.5

OVERHANGS AND FINS

01	02	03	04	05	06	07	08	09	10	11	12	13	14
Window	Overhang					Left Fin				Right Fin			
	Depth	Dist Up	Left Extent	Right Extent	Flap Ht.	Depth	Top Up	Dist L	Bot Up	Depth	Top Up	Dist R	Bot Up
Window 4	0	0	0	0	0	7.67	0	9.92	0	0	0	0	0
Window 5	0	0	0	0	0	7.67	0	4.58	0	0	0	0	0

Registration Number: 223-P016591464A-000-000-0000000-0000 Registration Date/Time: 2023-09-27 08:11:55 HERS Provider: CalCERTS Inc.

CA Building Energy Efficiency Standards - 2022 Residential Compliance Report Version: 2022.0.000 Schema Version: rev 20220901 Report Generated: 2023-09-22 15:15:44

CERTIFICATE OF COMPLIANCE - RESIDENTIAL PERFORMANCE COMPLIANCE METHOD **CF1R-PRF-01-E**

Project Name: Type C Lakeside **Calculation Date/Time:** 2023-09-23T00:15:01+02:00 **(Page 8 of 14)**

Calculation Description: Title 24 Analysis **Input File Name:** Type_C_Lakeside.ribd22x

OPAQUE SURFACES - CATHEDRAL CEILINGS

01	02	03	04	05	06	07	08	09	10	11
Name	Zone	Construction	Azimuth	Orientation	Area (ft^2)	Skylight Area (ft^2)	Roof Rise (x in 12)	Roof Reflectance	Roof Emittance	Cool Roof
Roof Rear	Undefined Zone	R-30 Roof No Attic	180	Back	40.06	0	8	0.1	0.85	No
Roof Rear 2	Undefined Zone	R-30 Roof No Attic	180	Back	177.68	0	8	0.1	0.85	No
Roof Rear 3	Undefined Zone	R-30 Roof No Attic	180	Back	55.43	0	8	0.1	0.85	No
Roof Rear 4	Undefined Zone	R-30 Roof No Attic	180	Back	60.35	0	8	0.1	0.85	No
Roof Rear 5	Undefined Zone	R-30 Roof No Attic	180	Back	144.92	0	8	0.1	0.85	No
Roof Front 3	Undefined Zone	R-30 Roof No Attic	0	Front	26.75	0	8	0.1	0.85	No

FENESTRATION / GLAZING

01	02	03	04	05	06	07	08	09	10	11	12	13	14
Name	Type	Surface	Orientation	Azimuth	Width (ft)	Height (ft)	Mult.	Area (ft^2)	U-factor	U-factor Source	SHGC	SHGC Source	Exterior Shading
Window	Window	Front Wall	Front	0			1	10	0.28	NFRC	0.35	NFRC	Bug Screen
Window 2	Window	Front Wall	Front	0			1	10	0.28	NFRC	0.35	NFRC	Bug Screen
Window 3	Window	Front Wall	Front	0			1	10	0.28	NFRC	0.35	NFRC	Bug Screen
Window 4	Window	Lateral 1 Wall	Left	90	2.5	4	1	10	0.28	NFRC	0.35	NFRC	Bug Screen
Window 5	Window	Lateral 1 Wall	Left	90	2.5	4	1	10	0.28	NFRC	0.35	NFRC	Bug Screen
Window 6	Window	Lateral 2 Wall	Right	270			1	7.5	0.28	NFRC	0.35	NFRC	Bug Screen
Window 7	Window	Lateral 2 Wall	Right	270			1	7.5	0.28	NFRC	0.35	NFRC	Bug Screen

Registration Number: 223-P016591464A-000-000-0000000-0000 Registration Date/Time: 2023-09-27 08:11:55 HERS Provider: CalCERTS Inc.

CA Building Energy Efficiency Standards - 2022 Residential Compliance Report Version: 2022.0.000 Schema Version: rev 20220901 Report Generated: 2023-09-22 15:15:44

CERTIFICATE OF COMPLIANCE - RESIDENTIAL PERFORMANCE COMPLIANCE METHOD **CF1R-PRF-01-E**

Project Name: Type C Lakeside **Calculation Date/Time:** 2023-09-23T00:15:01+02:00 **(Page 7 of 14)**

Calculation Description: Title 24 Analysis **Input File Name:** Type_C_Lakeside.ribd22x

ZONE INFORMATION

01	02	03	04	05	06	07
Zone Name	Zone Type	HVAC System Name	Zone Floor Area (ft^2)	Avg. Ceiling Height	Water Heating System 1	Status
Undefined Zone	Conditioned	Undefined System1	869.56	8	DHW Sys 1	New

OPAQUE SURFACES

01	02	03	04	05	06	07	08
Name	Zone	Construction	Azimuth	Orientation	Gross Area (ft^2)	Window and Door Area (ft2)	Tilt (deg)
Front Wall	Undefined Zone	R-21 Wall	0	Front	208.5	30	90
Lateral 1 Wall	Undefined Zone	R-21 Wall	90	Left	187.68	40.25	90
Lateral 2 Wall	Undefined Zone	R-21 Wall	270	Right	187.13	15	90
Front Wall 2	Undefined Zone	R-21 Wall	0	Front	33.22	0	90
Lateral 1 Wall 2	Undefined Zone	R-21 Wall	90	Left	178.69	20	90
Rear Wall	Undefined Zone	R-21 Wall	180	Back	97.33	10	90
Rear Wall 2	Undefined Zone	R-21 Wall	180	Back	40.67	6	90
Rear Wall 3	Undefined Zone	R-21 Wall	180	Back	40.67	6	90
Rear Wall 4	Undefined Zone	R-21 Wall	180	Back	97.33	10	90
Lateral 2 Wall 2	Undefined Zone	R-21 Wall	270	Right	146.05	20	90
Front Wall 3	Undefined Zone	R-21 Wall	0	Front	30.67	0	90

OPAQUE SURFACES - CATHEDRAL CEILINGS

01	02	03	04	05	06	07	08	09	10	11
Name	Zone	Construction	Azimuth	Orientation	Area (ft^2)	Skylight Area (ft^2)	Roof Rise (x in 12)	Roof Reflectance	Roof Emittance	Cool Roof
Roof Front	Undefined Zone	R-30 Roof No Attic	0	Front	350.59	0	8	0.1	0.85	No
Roof Front 2	Undefined Zone	R-30 Roof No Attic	0	Front	13.78	0	8	0.1	0.85	No

Registration Number: 223-P016591464A-000-000-0000000-0000 Registration Date/Time: 2023-09-27 08:11:55 HERS Provider: CalCERTS Inc.

CA Building Energy Efficiency Standards - 2022 Residential Compliance Report Version: 2022.0.000 Schema Version: rev 20220901 Report Generated: 2023-09-22 15:15:44

CERTIFICATE OF COMPLIANCE - RESIDENTIAL PERFORMANCE COMPLIANCE METHOD **CF1R-PRF-01-E**

Project Name: Type C Lakeside **Calculation Date/Time:** 2023-09-23T00:15:01+02:00 **(Page 6 of 14)**

Calculation Description: Title 24 Analysis **Input File Name:** Type_C_Lakeside.ribd22x

REQUIRED PV SYSTEMS

01	02	03	04	05	06	07	08	09	10	11	12
DC System Size (kWdc)	Exception	Module Type	Array Type	Power Electronics	CFI	Azimuth (deg)	Tilt Input	Array Angle (deg)	Tilt: (x in 12)	Inverter Eff. (%)	Annual Solar Access (%)
2.04	NA	Standard (14-17%)	Fixed	none	true	150-270	n/a	n/a	<=7:12	96	98

REQUIRED SPECIAL FEATURES

The following are features that must be installed as condition for meeting the modeled energy performance for this computer analysis.

- Indoor air quality, balanced fan
- IAQ Ventilation System: as low as 0.25 W/CFM
- IAQ Ventilation System Heat Recovery: minimum 80 SRE and 83 ASRE
- IAQ Ventilation System: supply outside air inlet, filter, and H/ERV cores accessible per RACM Reference Manual
- IAQ Ventilation System: fault indicator display
- Window overhangs and/or fins
- Compact distribution system basic credit
- Recirculating with demand control, occupancy/motion sensor

HERS FEATURE SUMMARY

The following is a summary of the features that must be field-verified by a certified HERS Rater as a condition for meeting the modeled energy performance for this computer analysis. Additional detail is provided in the building tables below. Registered CF2Rs and CF3Rs are required to be completed in the HERS Registry

- Indoor air quality ventilation
- Kitchen range hood
- Verified Refrigerant Charge
- Verified heat pump rated heating capacity

BUILDING - FEATURES INFORMATION

01	02	03	04	05	06	07
Project Name	Conditioned Floor Area (ft^2)	Number of Dwelling Units	Number of Bedrooms	Number of Zones	Number of Ventilation Cooling Systems	Number of Water Heating Systems
Type C Lakeside	869.56	1	2	1	0	1

Registration Number: 223-P016591464A-000-000-0000000-0000 Registration Date/Time: 2023-09-27 08:11:55 HERS Provider: CalCERTS Inc.

CA Building Energy Efficiency Standards - 2022 Residential Compliance Report Version: 2022.0.000 Schema Version: rev 20220901 Report Generated: 2023-09-22 15:15:44

CERTIFICATE OF COMPLIANCE - RESIDENTIAL PERFORMANCE COMPLIANCE METHOD **CF1R-PRF-01-E**

Project Name: Type C Lakeside **Calculation Date/Time:** 2023-09-23T00:15:01+02:00 **(Page 5 of 14)**

Calculation Description: Title 24 Analysis **Input File Name:** Type_C_Lakeside.ribd22x

ENERGY USE INTENSITY

	Standard Design (kBtu/ft^2 - yr)	Proposed Design (kBtu/ft^2 - yr)	Compliance Margin (kBtu/ft^2 - yr)	Margin Percentage
North Facing				
Gross EUI[1]	[illegible]	[illegible]	[illegible]	14.36
Net EUI[2]	27.47	21.67	5.8	21.11
East Facing				
Gross EUI[1]	[illegible]	34.51	5.96	[illegible]
Net EUI[2]	[illegible]	21.52	5.95	21.6
South Facing				
Gross EUI[1]	40.47	34.8	[illegible]	14.01
Net EUI[2]	27.47	21.8[illegible]	5.[illegible]	20.6
West Facing				
Gross EUI[1]	[illegible]	[illegible]72	5.75	14.21
Net EUI[2]	27.47	21.73	5.74	20.9

Notes
1. Gross EUI: [illegible] (not including [illegible]tal Building Area)
2. Net EUI: [illegible]ergy Use [illegible]tal (including PV) / To[illegible]ing Area.

Registration Number: 223-P016591464A-000-000-0000000-0000 Registration Date/Time: 2023-09-27 08:11:55 HERS Provider: CalCERTS Inc.

CA Building Energy Efficiency Standards - 2022 Residential Compliance Report Version: 2022.0.000 Schema Version: rev 20220901 Report Generated: 2023-09-22 15:15:44

CERTIFICATE OF COMPLIANCE - RESIDENTIAL PERFORMANCE COMPLIANCE METHOD **CF1R-PRF-01-E**

Project Name: Type C Lakeside **Calculation Date/Time:** 2023-09-23T00:15:01+02:00 **(Page 4 of 14)**

Calculation Description: Title 24 Analysis **Input File Name:** Type_C_Lakeside.ribd22x

ENERGY USE SUMMARY

Energy Use	Standard Design Source Energy (EDR1) (kBtu/ft^2 -yr)	Standard Design TDV Energy (EDR2) (kTDV/ft^2 -yr)	Proposed Design Source Energy (EDR1) (kBtu/ft^2 -yr)	Proposed Design TDV Energy (EDR2) (kTDV/ft^2 -yr)	Compliance Margin (EDR1)	Compliance Margin (EDR2)
Space Heating	[illegible]	130.3	7.51	79.21	11.88	51.09
Space Cooling	0.2[illegible]	3.08	0.41	4.73	-0.14	-1.65
IAQ Ventilation	0.97	10.52	0.51	5.55	0.46	4.97
Water Heating	[illegible].6	47.76	11.21	72.04	-7.61	-24.28
Self Utilization/Flex[illegible]				0		0
South Facing Efficiency Compliance Total	**24.23**	**191.66**	**19.64**	**161.53**	**4.59**	**30.13**
Space Heating	19.39	130.3	7.52	79.27	11.87	51.03
Space Cooling	0.27	3.08	0.34	4.02	-0.07	-0.94
IAQ Ventilation	0.97	10.52	0.51	5.55	0.46	4.97
Water Heating	3.6	47.76	11.21	72.04	-7.61	-24.28
Self Utilization/Flexibility Credit				0		0
West Facing Efficiency Compliance Total	**24.23**	**191.66**	**19.58**	**160.88**	**4.65**	**30.78**

Registration Number: 223-P016591464A-000-000-0000000-0000 Registration Date/Time: 2023-09-27 08:11:55 HERS Provider: CalCERTS Inc.

CA Building Energy Efficiency Standards - 2022 Residential Compliance Report Version: 2022.0.000 Schema Version: rev 20220901 Report Generated: 2023-09-22 15:15:44

CERTIFICATE OF COMPLIANCE - RESIDENTIAL PERFORMANCE COMPLIANCE METHOD **CF1R-PRF-01-E**

Project Name: Type C Lakeside **Calculation Date/Time:** 2023-09-23T00:15:01+02:00 **(Page 3 of 14)**

Calculation Description: Title 24 Analysis **Input File Name:** Type_C_Lakeside.ribd22x

ENERGY USE SUMMARY

Energy Use	Standard Design Source Energy (EDR1) (kBtu/ft^2 -yr)	Standard Design TDV Energy (EDR2) (kTDV/ft^2 -yr)	Proposed Design Source Energy (EDR1) (kBtu/ft^2 -yr)	Proposed Design TDV Energy (EDR2) (kTDV/ft^2 -yr)	Compliance Margin (EDR1)	Compliance Margin (EDR2)
Space Heating	19.39	130.3	7.43	78.03	11.96	52.27
Space Cooling	0.27	3.08	0.39	4.75	-0.12	-1.67
IAQ Ventilation	0.97	10.52	0.51	5.55	0.46	4.97
Water Heating	3.6	47.76	11.21	72.04	-7.61	-24.28
Self Utilization/Flexibility Credit				0		0
North Facing Efficiency Compliance Total	**24.23**	**191.66**	**19.54**	**160.37**	**4.69**	**31.29**
Space Heating	19.39	130.3	7.3	76.87	12.09	53.43
Space Cooling	0.27	3.08	0.37	4.42	-0.1	-1.34
IAQ Ventilation	0.97	10.52	0.51	5.55	0.46	4.97
Water Heating	3.6	47.76	11.21	72.04	-7.61	-24.28
Self Utilization/Flexibility Credit				0		0
East Facing Efficiency Compliance Total	**24.23**	**191.66**	**19.39**	**158.88**	**4.84**	**32.78**

Registration Number: 223-P016591464A-000-000-0000000-0000 Registration Date/Time: 2023-09-27 08:11:55 HERS Provider: CalCERTS Inc.

CA Building Energy Efficiency Standards - 2022 Residential Compliance Report Version: 2022.0.000 Schema Version: rev 20220901 Report Generated: 2023-09-22 15:15:44

CERTIFICATE OF COMPLIANCE - RESIDENTIAL PERFORMANCE COMPLIANCE METHOD **CF1R-PRF-01-E**

Project Name: Type C Lakeside **Calculation Date/Time:** 2023-09-23T00:15:01+02:00 **(Page 2 of 14)**

Calculation Description: Title 24 Analysis **Input File Name:** Type_C_Lakeside.ribd22x

ENERGY DESIGN RATINGS

	Energy Design Ratings			Compliance Margins		
	Source Energy (EDR1)	Efficiency[1] EDR (EDR2efficiency)	Total[2] EDR (EDR2total)	Source Energy (EDR1)	Efficiency[1] EDR (EDR2efficiency)	Total[2] EDR (EDR2total)
Standard Design	47	56.3	47.7			
Proposed Design						
North Facing	40.2	47.1	41.8	6.8	9.2	5.9
East Facing	40	46.7	41.5	7	9.6	6.2
South Facing	40.3	47.4	42	6.7	8.9	5.7
West Facing	40.2	47.3	41.9	6.8	9	5.8

RESULT[3]: PASS

[1]Efficiency EDR includes improvements like a better building envelope and more efficient equipment
[2]Total EDR includes efficiency and demand response measures such as photovoltaic (PV) system and batteries
[3]Building complies when source energy, efficiency and total compliance margins are greater than or equal to zero and unmet load hour limits are not exceeded

- Standard Design PV Capacity: 2.04 kWdc
- Proposed PV Capacity Scaling: North (2.04 kWdc) East (2.04 kWdc) South (2.04 kWdc) West (2.04 kWdc)

Registration Number: 223-P016591464A-000-000-0000000-0000 Registration Date/Time: 2023-09-27 08:11:55 HERS Provider: CalCERTS Inc.

CA Building Energy Efficiency Standards - 2022 Residential Compliance Report Version: 2022.0.000 Schema Version: rev 20220901 Report Generated: 2023-09-22 15:15:44

CERTIFICATE OF COMPLIANCE - RESIDENTIAL PERFORMANCE COMPLIANCE METHOD **CF1R-PRF-01-E**

Project Name: Type C Lakeside **Calculation Date/Time:** 2023-09-23T00:15:01+02:00 **(Page 1 of 14)**

Calculation Description: Title 24 Analysis **Input File Name:** Type_C_Lakeside.ribd22x

GENERAL INFORMATION

01	Project Name	Type C Lakeside		
02	Run Title	Title 24 Analysis		
03	Project Location	_		
04	City		05	Standards Version 2022
06	Zip code		07	Software Version EnergyPro 9.0
08	Climate Zone	16	09	Front Orientation (deg/ Cardinal) All orientations
10	Building Type	Single family	11	Number of Dwelling Units 1
12	Project Scope	Newly Constructed	13	Number of Bedrooms 2
14	Addition Cond. Floor Area (ft^2)	0	15	Number of Stories 1
16	Existing Cond. Floor Area (ft^2)	n/a	17	Fenestration Average U-factor 0.28
18	Total Cond. Floor Area (ft^2)	869.56	19	Glazing Percentage (%) 15.80%
20	ADU Bedroom Count	n/a		

COMPLIANCE RESULTS

01	This building Complies with Computer Performance
02	This building incorporates features that require field testing and/or verification by a certified HERS rater under the supervision of a CEC-approved HERS provider.
03	This building incorporates one or more Special Features shown below

Registration Number: 223-P016591464A-000-000-0000000-0000 Registration Date/Time: 2023-09-27 08:11:55 HERS Provider: CalCERTS Inc.

CA Building Energy Efficiency Standards - 2022 Residential Compliance Report Version: 2022.0.000 Schema Version: rev 20220901 Report Generated: 2023-09-22 15:15:44

NOT FOR CONSTRUCTION

ZAL ENGINEERING
MECHANICAL CONSULTANTS
99 PACIFIC ST, STE 375G
MONTEREY, CA 93940
TELEPHONE(831)641-7739
JOB NO. 23020.00

PLUMAS COUNTY
PRE-DESIGNED ADU
BUELLTON, CALIFORNIA

T24 FORMS
TYPE C
LAKESIDE

NO.	DESCRIPTION	DATE
1	.	.
2		
3		
4		

ENGINEER BY:

DRAWN BY:

CHECKED BY:

SHEET NUMBER

T24.19

SHEET OF

THE USE OF THESE PLANS AND SPECIFICATIONS IS RESTRICTED TO THE ORIGINAL SITE FOR WHICH THEY WERE PREPARED, AND PUBLICATION THEREOF IS EXPRESSLY LIMITED TO SUCH USE. RE-USE, REPRODUCTION OR PUBLICATION BY ANY METHOD IN WHOLE OR IN PART IS PROHIBITED. TITLE TO THE PLANS AND SPECIFICATIONS REMAINS WITH THE ENGINEER AND VISUAL CONTACT WITH THEM CONSTITUDES PRIMA FACIE EVIDENCE OF THE ACCEPTANCE OF THESE RESTRICTIONS.

NOT FOR CONSTRUCTION

CERTIFICATE OF COMPLIANCE - RESIDENTIAL PERFORMANCE COMPLIANCE METHOD **CF1R-PRF-01-E**

Project Name: Type C Lakeside **Calculation Date/Time:** 2023-09-23T00:15:01+02:00 **(Page 14 of 14)**

Calculation Description: Title 24 Analysis **Input File Name:** Type_C_Lakeside.ribd22x

DOCUMENTATION AUTHOR'S DECLARATION STATEMENT

1. I certify that this Certificate of Compliance documentation is accurate and complete.

Documentation Author Name: Jaime Zaldivar	Documentation Author Signature:
Company: ZAL Engineering	Signature Date: 2023-09-27
Address: 99 Pacific St, Ste 375G	CEA/ HERS Certification Identification (If applicable): M37306
City/State/Zip: Monterey, CA 93940	Phone: 831-641-7739

RESPONSIBLE PERSON'S DECLARATION STATEMENT

I certify the following under penalty of perjury, under the laws of the State of California:

1. I am eligible under Division 3 of the Business and Professions Code to accept responsibility for the building design identified on this Certificate of Compliance.
2. I certify that the energy efficiency systems and performance specifications identified on this Certificate of Compliance conform to the requirements of Title 24, Part 1 and Part 6 of the California Code of Regulations.
3. The building design features or system design features identified on this Certificate of Compliance are consistent with the information provided on other applicable compliance documents, worksheets, calculations, plans and specifications submitted to the enforcement agency for approval with this building permit application.

Responsible Person's Name: Jaime Zaldivar	Responsible Person's Signature:
Company: ZAL Engineering	Date/Time: 2023-09-27 08:11:55
Address: 99 Pacific St, Ste 375G	License: M37306
City/State/Zip: Monterey, CA 93940	Phone: 831-641-7739

This report is digitally signed by CalCERTS. This digital signature is provided in order to secure the content of this registered document, and in no way implies Calculation Provider responsibility for the accuracy of the information.

Easy to Verify at CalCERTS.com

CERTIFICATE OF COMPLIANCE - RESIDENTIAL PERFORMANCE COMPLIANCE METHOD **CF1R-PRF-01-E**

Project Name: Type C Lakeside **Calculation Date/Time:** 2023-09-23T00:15:01+02:00 **(Page 13 of 14)**

Calculation Description: Title 24 Analysis **Input File Name:** Type_C_Lakeside.ribd22x

HVAC HEAT PUMPS - HERS VERIFICATION

01	02	03	04	05	06	07	08	09
Name	Verification	Airflow Method	Verified EER/EER2	Verified SEER/SEER2	Verified Refrigerant Charge	Verified HSPF/HSPF2	Verified Heating Cap 47	Verified Heating Cap 17
1-hers-htpump	Not Required	0	Not Required	Not Required	Yes	No	Yes	Yes

INDOOR AIR QUALITY (IAQ) FANS

01	02	03	04	05	06	07	08	09
Dwelling Unit	Airflow (CFM)	Fan Efficacy (W/CFM)	IAQ Fan Type	Includes Heat/Energy Recovery?	IAQ Recovery Effectiveness - SRE	Includes Fault Indicator Display?	HERS Verification	Status
SFam IAQVentRpt 1-1	80	0.25	Balanced	Yes	83	No	Yes	

CERTIFICATE OF COMPLIANCE - RESIDENTIAL PERFORMANCE COMPLIANCE METHOD **CF1R-PRF-01-E**

Project Name: Type C Lakeside **Calculation Date/Time:** 2023-09-23T00:15:01+02:00 **(Page 12 of 14)**

Calculation Description: Title 24 Analysis **Input File Name:** Type_C_Lakeside.ribd22x

WATER HEATING - COMPACT DISTRIBUTION

01	02	03	04	05	06	07
Dwelling Unit type	Water Heating System Name	Master Bath distance of furthest fixture to Water Heater (ft)	Kitchen distance of furthest fixture to Water Heater (ft)	Furthest Third furthest fixture to Water Heater (ft)	Compactness Factor	HERS Verification
Dwelling	DHW Sys 1	n/a	n/a	n/a	0.7	n/a

WATER HEATING - HERS VERIFICATION

01	02	03	04	05	06	07
Name	Pipe Insulation	Parallel Piping	Compact Distribution	Compact Distribution Type	Recirculation Control	Shower Drain Water Heat Recovery
DHW Sys 1 - 1/1	Not Required	Not Required	Not Required	Basic	Not Required	Not Required

SPACE CONDITIONING SYSTEMS

01	02	03	04	05	06	07	08	09
Name	System Type	Heating Unit Name	Heating Equipment Count	Cooling Unit Name	Cooling Equipment Count	Fan Name	Distribution Name	Required Thermostat Type
Undefined System1	Heat pump heating cooling	Heat Pump System 1	1	Heat Pump System 1	1	n/a	n/a	Setback

HVAC - HEAT PUMPS

01	02	03	04	05	06	07	08	09	10	11	12	13
			Heating				Cooling					
Name	System Type	Number of Units	Efficiency Type	HSPF / HSPF2 / COP	Cap 47	Cap 17	Efficiency Type	SEER / SEER2	EER / EER / CEER	Zonally Controlled	Compressor Type	HERS Verification
Heat Pump System 1	Ductless MiniSplit HP	1	HSPF2	10	30600	21000	EER2SEER2	20	13.6	Not Zonal	Single Speed	Heat Pump System 1-hers-htpump

CERTIFICATE OF COMPLIANCE - RESIDENTIAL PERFORMANCE COMPLIANCE METHOD **CF1R-PRF-01-E**

Project Name: Type C Lakeside **Calculation Date/Time:** 2023-09-23T00:15:01+02:00 **(Page 11 of 14)**

Calculation Description: Title 24 Analysis **Input File Name:** Type_C_Lakeside.ribd22x

BUILDING ENVELOPE - HERS VERIFICATION

01	02	03	04	05
Quality Insulation Installation (QII)	High R-value Spray Foam Insulation	Building Envelope Air Leakage	CFM50	CFM50
Not Required	Not Required	N/A	n/a	n/a

WATER HEATING SYSTEMS

01	02	03	04	05	06	07	08	09
Name	System Type	Distribution Type	Water Heater Name	Number of Units	Solar Heating System	Compact Distribution	HERS Verification	Water Heater Name (#)
DHW Sys 1	Domestic Hot Water (DHW)	Demand Recirculation Sensor Controls	DHW Heater 1	1	n/a	Basic	n/a	DHW Heater 1 (1)

WATER HEATERS

01	02	03	04	05	06	07	08	09	10	11	12	13
Name	Heating Element Type	Tank Type	# of Units	Tank Vol. (gal)	Heating Efficiency Type	Efficiency	Rated Input Type	Input Rating or Pilot	Tank Insulation R-value (Int/Ext)	Standby Loss or Recovery Eff	1st Hr. Rating or Flow Rate	Tank Location
DHW Heater 1	Propane	Consumer Instantaneous	1	0	UEF	0.93	Btu/Hr	200000	0	n/a	n/a	

RECIRCULATION LOOPS

01	02	03	04	05
Water Heating System Name	Number of Recirculation Loops	Loop Insulation Thickness (in)	Recirculation Loop Location	Recirculation Pump Power (W)
DHW Sys 1	1	1.5	Conditioned	0

CERTIFICATE OF COMPLIANCE - RESIDENTIAL PERFORMANCE COMPLIANCE METHOD **CF1R-PRF-01-E**

Project Name: Type C Lakeside **Calculation Date/Time:** 2023-09-23T00:15:01+02:00 **(Page 10 of 14)**

Calculation Description: Title 24 Analysis **Input File Name:** Type_C_Lakeside.ribd22x

SLAB FLOORS

01	02	03	04	05	06	07	08
Name	Zone	Area (ft^2)	Perimeter (ft)	Edge Insul. R-value and Depth	Edge Insul. R-value and Depth	Carpeted Fraction	Heated
Slab-on-Grade	Undefined Zone	350.59	54.33	none	0	80%	No
Slab-on-Grade 2	Undefined Zone	53.84	0.1	none	0	80%	No
Slab-on-Grade 3	Undefined Zone	177.68	27.58	none	0	80%	No
Slab-on-Grade 4	Undefined Zone	55.43	5.08	none	0	80%	No
Slab-on-Grade 5	Undefined Zone	60.35	5.08	none	0	80%	No
Slab-on-Grade 6	Undefined Zone	171.67	30.08	none	0	80%	No

OPAQUE SURFACE CONSTRUCTIONS

01	02	03	04	05	06	07	08
Construction Name	Surface Type	Construction Type	Framing	Total Cavity R-value	Interior / Exterior Continuous R-value	U-factor	Assembly Layers
R-21 Wall	Exterior Walls	Wood Framed Wall	2x6 @ 16 in. O. C.	R-21	5 / None	0.048	Inside Finish: Gypsum Board Sheathing / Insulation: R-5 Sheathing Cavity / Frame: R-21 / 2x6 Exterior Finish: 3 Coat Stucco
R-30 Roof No Attic	Cathedral Ceilings	Wood Framed Ceiling	2x12 @ 16 in. O. C.	R-30	None / None	0.033	Roofing: Light Roof (Asphalt Shingle) Roof Deck: Wood Siding/sheathing/decking Radiant Barrier Cavity / Frame: R-30 / 2x12 Inside Finish: Gypsum Board

ZAL ENGINEERING

ZAL ENGINEERING
MECHANICAL CONSULTANTS
99 PACIFIC ST, STE 375G
MONTEREY, CA 93940
TELEPHONE (831) 641-7739
JOB NO. 23020.00

PLUMAS COUNTY
PRE-DESIGNED ADU
BUELLTON, CALIFORNIA

T24 FORMS
TYPE C
LAKESIDE

NO.	DESCRIPTION	DATE
1		
2		
3		
4		

ENGINEER BY:

DRAWN BY:

CHECKED BY:

SHEET NUMBER

T24.20

SHEET OF

THE USE OF THESE PLANS AND SPECIFICATIONS IS RESTRICTED TO THE ORIGINAL SITE FOR WHICH THEY WERE PREPARED, AND PUBLICATION THEREOF IS EXPRESSLY LIMITED TO SUCH USE. RE-USE, REPRODUCTION OR PUBLICATION BY ANY METHOD IN WHOLE OR IN PART IS PROHIBITED. TITLE TO THE PLANS AND SPECIFICATIONS REMAINS WITH THE ENGINEER AND VISUAL CONTACT WITH THEM CONSTITUDES PRIMA FACIE EVIDENCE OF THE ACCEPTANCE OF THESE RESTRICTIONS.

CERTIFICATE OF COMPLIANCE - RESIDENTIAL PERFORMANCE COMPLIANCE METHOD **CF1R-PRF-01-E**

Project Name: Type C Meadow **Calculation Date/Time:** 2023-09-23T00:20:43+02:00 **(Page 9 of 14)**

Calculation Description: Title 24 Analysis **Input File Name:** Type_C_Meadow.ribd22x

FENESTRATION / GLAZING

01	02	03	04	05	06	07	08	09	10	11	12	13	14
Name	Type	Surface	Orientation	Azimuth	Width (ft)	Height (ft)	Mult.	Area (ft^2)	U-factor	U-factor Source	SHGC	SHGC Source	Exterior Shading
Window 8	Window	Lateral 1 Wall 2	Left	90			1	6.25	0.28	NFRC	0.35	NFRC	Bug Screen
Window 9	Window	Lateral 1 Wall 2	Left	90			1	10	0.28	NFRC	0.35	NFRC	Bug Screen
Window 10	Window	Lateral 1 Wall 2	Left	90			1	10	0.28	NFRC	0.35	NFRC	Bug Screen
Window 11	Window	Rear Wall	Back	180			1	10	0.28	NFRC	0.35	NFRC	Bug Screen
Window 12	Window	Rear Wall 2	Back	180			1	6	0.28	NFRC	0.35	NFRC	Bug Screen
Window 13	Window	Rear Wall 3	Back	180			1	6	0.28	NFRC	0.35	NFRC	Bug Screen
Window 14	Window	Rear Wall 4	Back	180			1	10	0.28	NFRC	0.35	NFRC	Bug Screen
Window 15	Window	Lateral 2 Wall 2	Right	270			1	20	0.28	NFRC	0.35	NFRC	Bug Screen

OPAQUE DOORS

01	02	03	04
Name	Side of Building	Area (ft^2)	U-factor
Door	Lateral 1 Wall	20.25	0.5

OVERHANGS AND FINS

01	02	03	04	05	06	07	08	09	10	11	12	13	14
Window	Overhang					Left Fin				Right Fin			
	Depth	Dist Up	Left Extent	Right Extent	Flap Ht.	Depth	Top Up	Dist L	Bot Up	Depth	Top Up	Dist R	Bot Up
Window 4	0	0	0	0	0	7.67	0	5.17	0	0	0	0	0

Registration Number: 223-P016591465A-000-000-0000000-0000 Registration Date/Time: 2023-09-27 08:12:19 HERS Provider: CalCERTS Inc.

CA Building Energy Efficiency Standards - 2022 Residential Compliance Report Version: 2022.0.000 Schema Version: rev 20220901 Report Generated: 2023-09-22 15:21:21

CERTIFICATE OF COMPLIANCE - RESIDENTIAL PERFORMANCE COMPLIANCE METHOD **CF1R-PRF-01-E**

Project Name: Type C Meadow **Calculation Date/Time:** 2023-09-23T00:20:43+02:00 **(Page 8 of 14)**

Calculation Description: Title 24 Analysis **Input File Name:** Type_C_Meadow.ribd22x

OPAQUE SURFACES - CATHEDRAL CEILINGS

01	02	03	04	05	06	07	08	09	10	11
Name	Zone	Construction	Azimuth	Orientation	Area (ft^2)	Skylight Area (ft^2)	Roof Rise (x in 12)	Roof Reflectance	Roof Emittance	Cool Roof
Roof Rear	Undefined Zone	R-30 Roof No Attic	180	Back	40.06	0	8	0.1	0.85	No
Roof Rear 2	Undefined Zone	R-30 Roof No Attic	180	Back	177.68	0	8	0.1	0.85	No
Roof Rear 3	Undefined Zone	R-30 Roof No Attic	180	Back	55.43	0	8	0.1	0.85	No
Roof Rear 4	Undefined Zone	R-30 Roof No Attic	180	Back	60.35	0	8	0.1	0.85	No
Roof Rear 5	Undefined Zone	R-30 Roof No Attic	180	Back	144.92	0	8	0.1	0.85	No
Roof Front 3	Undefined Zone	R-30 Roof No Attic	0	Front	26.75	0	8	0.1	0.85	No

FENESTRATION / GLAZING

01	02	03	04	05	06	07	08	09	10	11	12	13	14
Name	Type	Surface	Orientation	Azimuth	Width (ft)	Height (ft)	Mult.	Area (ft^2)	U-factor	U-factor Source	SHGC	SHGC Source	Exterior Shading
Window	Window	Front Wall	Front	0			1	25	0.28	NFRC	0.35	NFRC	Bug Screen
Window 2	Window	Front Wall	Front	0			1	12.5	0.28	NFRC	0.35	NFRC	Bug Screen
Window 3	Window	Front Wall	Front	0			1	12.5	0.28	NFRC	0.35	NFRC	Bug Screen
Window 4	Window	Lateral 1 Wall	Left	90	2.5	4	1	10	0.28	NFRC	0.35	NFRC	Bug Screen
Window 5	Window	Lateral 2 Wall	Right	270			1	6.25	0.28	NFRC	0.35	NFRC	Bug Screen
Window 6	Window	Lateral 2 Wall	Right	270			1	10	0.28	NFRC	0.35	NFRC	Bug Screen
Window 7	Window	Lateral 1 Wall 2	Left	90			1	6.25	0.28	NFRC	0.35	NFRC	Bug Screen

Registration Number: 223-P016591465A-000-000-0000000-0000 Registration Date/Time: 2023-09-27 08:12:19 HERS Provider: CalCERTS Inc.

CA Building Energy Efficiency Standards - 2022 Residential Compliance Report Version: 2022.0.000 Schema Version: rev 20220901 Report Generated: 2023-09-22 15:21:21

CERTIFICATE OF COMPLIANCE - RESIDENTIAL PERFORMANCE COMPLIANCE METHOD **CF1R-PRF-01-E**

Project Name: Type C Meadow **Calculation Date/Time:** 2023-09-23T00:20:43+02:00 **(Page 7 of 14)**

Calculation Description: Title 24 Analysis **Input File Name:** Type_C_Meadow.ribd22x

ZONE INFORMATION

01	02	03	04	05	06	07
Zone Name	Zone Type	HVAC System Name	Zone Floor Area (ft^2)	Avg. Ceiling Height	Water Heating System 1	Status
Undefined Zone	Conditioned	Undefined System1	869.56	8	DHW Sys 1	New

OPAQUE SURFACES

01	02	03	04	05	06	07	08
Name	Zone	Construction	Azimuth	Orientation	Gross Area (ft^2)	Window and Door Area (ft2)	Tilt (deg)
Front Wall	Undefined Zone	R-21 Wall	0	Front	208.5	50	90
Lateral 1 Wall	Undefined Zone	R-21 Wall	90	Left	113.33	30.25	90
Lateral 2 Wall	Undefined Zone	R-21 Wall	270	Right	185.14	16.25	90
Front Wall 2	Undefined Zone	R-21 Wall	0	Front	33.22	0	90
Lateral 1 Wall 2	Undefined Zone	R-21 Wall	90	Left	168.85	32.5	90
Rear Wall	Undefined Zone	R-21 Wall	180	Back	97.33	10	90
Rear Wall 2	Undefined Zone	R-21 Wall	180	Back	40.67	6	90
Rear Wall 3	Undefined Zone	R-21 Wall	180	Back	40.67	6	90
Rear Wall 4	Undefined Zone	R-21 Wall	180	Back	97.33	10	90
Lateral 2 Wall 2	Undefined Zone	R-21 Wall	270	Right	146.05	20	90
Front Wall 3	Undefined Zone	R-21 Wall	0	Front	30.67	0	90

OPAQUE SURFACES - CATHEDRAL CEILINGS

01	02	03	04	05	06	07	08	09	10	11
Name	Zone	Construction	Azimuth	Orientation	Area (ft^2)	Skylight Area (ft^2)	Roof Rise (x in 12)	Roof Reflectance	Roof Emittance	Cool Roof
Roof Front	Undefined Zone	R-30 Roof No Attic	0	Front	350.59	0	8	0.1	0.85	No
Roof Front 2	Undefined Zone	R-30 Roof No Attic	0	Front	13.78	0	8	0.1	0.85	No

Registration Number: 223-P016591465A-000-000-0000000-0000 Registration Date/Time: 2023-09-27 08:12:19 HERS Provider: CalCERTS Inc.

CA Building Energy Efficiency Standards - 2022 Residential Compliance Report Version: 2022.0.000 Schema Version: rev 20220901 Report Generated: 2023-09-22 15:21:21

CERTIFICATE OF COMPLIANCE - RESIDENTIAL PERFORMANCE COMPLIANCE METHOD **CF1R-PRF-01-E**

Project Name: Type C Meadow **Calculation Date/Time:** 2023-09-23T00:20:43+02:00 **(Page 6 of 14)**

Calculation Description: Title 24 Analysis **Input File Name:** Type_C_Meadow.ribd22x

REQUIRED PV SYSTEMS

01	02	03	04	05	06	07	08	09	10	11	12
DC System Size (kWdc)	Exception	Module Type	Array Type	Power Electronics	CFI	Azimuth (deg)	Tilt Input	Array Angle (deg)	Tilt: (x in 12)	Inverter Eff. (%)	Annual Solar Access (%)
2.04	NA	Standard (14-17%)	Fixed	none	true	150-270	n/a	n/a	<=7:12	96	98

REQUIRED SPECIAL FEATURES

The following are features that must be installed as condition for meeting the modeled energy performance for this computer analysis.

- Indoor air quality, balanced fan
- IAQ Ventilation System: as low as 0.25 W/CFM
- IAQ Ventilation System Heat Recovery: minimum 80 SRE and 83 ASRE
- IAQ Ventilation System: supply outside air inlet, filter, and H/ERV cores accessible per RACM Reference Manual
- IAQ Ventilation System: fault indicator display
- Window overhangs and/or fins
- Compact distribution system basic credit
- Recirculating with demand control, occupancy/motion sensor

HERS FEATURE SUMMARY

The following is a summary of the features that must be field-verified by a certified HERS Rater as a condition for meeting the modeled energy performance for this computer analysis. Additional detail is provided in the building tables below. Registered CF2Rs and CF3Rs are required to be completed in the HERS Registry

- Indoor air quality ventilation
- Kitchen range hood
- Verified Refrigerant Charge
- Verified heat pump rated heating capacity

BUILDING - FEATURES INFORMATION

01	02	03	04	05	06	07
Project Name	Conditioned Floor Area (ft^2)	Number of Dwelling Units	Number of Bedrooms	Number of Zones	Number of Ventilation Cooling Systems	Number of Water Heating Systems
Type C Meadow	869.56	1	2	1	0	1

Registration Number: 223-P016591465A-000-000-0000000-0000 Registration Date/Time: 2023-09-27 08:12:19 HERS Provider: CalCERTS Inc.

CA Building Energy Efficiency Standards - 2022 Residential Compliance Report Version: 2022.0.000 Schema Version: rev 20220901 Report Generated: 2023-09-22 15:21:21

CERTIFICATE OF COMPLIANCE - RESIDENTIAL PERFORMANCE COMPLIANCE METHOD **CF1R-PRF-01-E**

Project Name: Type C Meadow **Calculation Date/Time:** 2023-09-23T00:20:43+02:00 **(Page 5 of 14)**

Calculation Description: Title 24 Analysis **Input File Name:** Type_C_Meadow.ribd22x

ENERGY USE INTENSITY

	Standard Design (kBtu/ft^2 - yr)	Proposed Design (kBtu/ft^2 - yr)	Compliance Margin (kBtu/ft^2 - yr)	Margin Percentage
North Facing				
Gross EUI[1]	[illegible]	[illegible]	[illegible]	12.72
Net EUI[2]	26.81	21.73	5.08	18.95
East Facing				
Gross EUI[1]	39.85	34.59	5.26	[illegible]
Net EUI[2]	[illegible]	21.55	5.26	19.6[illegible]
South Facing				
Gross EUI[1]	39.85	34.64	[illegible]	13.07
Net EUI[2]	26.81	21.9[illegible]	5.[illegible]	19.47
West Facing				
Gross EUI[1]	[illegible]	[illegible]77	5.08	12.75
Net EUI[2]	26.81	21.72	5.09	18.99

Notes
1. Gross EUI: [illegible] (not including [illegible] Total Building Area)
2. Net EUI: [illegible] Energy Use Total (including PV) / Total [illegible] Area.

Registration Number: 223-P016591465A-000-000-0000000-0000 Registration Date/Time: 2023-09-27 08:12:19 HERS Provider: CalCERTS Inc.

CA Building Energy Efficiency Standards - 2022 Residential Compliance Report Version: 2022.0.000 Schema Version: rev 20220901 Report Generated: 2023-09-22 15:21:21

CERTIFICATE OF COMPLIANCE - RESIDENTIAL PERFORMANCE COMPLIANCE METHOD **CF1R-PRF-01-E**

Project Name: Type C Meadow **Calculation Date/Time:** 2023-09-23T00:20:43+02:00 **(Page 4 of 14)**

Calculation Description: Title 24 Analysis **Input File Name:** Type_C_Meadow.ribd22x

ENERGY USE SUMMARY

Energy Use	Standard Design Source Energy (EDR1) (kBtu/ft^2 -yr)	Standard Design TDV Energy (EDR2) (kTDV/ft^2 -yr)	Proposed Design Source Energy (EDR1) (kBtu/ft^2 -yr)	Proposed Design TDV Energy (EDR2) (kTDV/ft^2 -yr)	Compliance Margin (EDR1)	Compliance Margin (EDR2)
Space Heating	[illegible]	125.86	7.38	77.87	11.33	47.99
Space Cooling	0.3	3.53	0.43	5.35	-0.13	-1.82
IAQ Ventilation	0.97	10.52	0.51	5.55	0.46	4.97
Water Heating	[illegible].6	47.77	11.21	72.04	-7.61	-24.27
Self Utilization/Flex				0		0
South Facing Efficiency Compliance Total	**23.58**	**187.68**	**19.53**	**160.81**	**4.05**	**26.87**
Space Heating	18.71	125.86	7.48	78.75	11.23	47.11
Space Cooling	0.3	3.53	0.44	5.31	-0.14	-1.78
IAQ Ventilation	0.97	10.52	0.51	5.55	0.46	4.97
Water Heating	3.6	47.77	11.21	72.04	-7.61	-24.27
Self Utilization/Flexibility Credit				0		0
West Facing Efficiency Compliance Total	**23.58**	**187.68**	**19.64**	**161.65**	**3.94**	**26.03**

Registration Number: 223-P016591465A-000-000-0000000-0000 Registration Date/Time: 2023-09-27 08:12:19 HERS Provider: CalCERTS Inc.

CA Building Energy Efficiency Standards - 2022 Residential Compliance Report Version: 2022.0.000 Schema Version: rev 20220901 Report Generated: 2023-09-22 15:21:21

CERTIFICATE OF COMPLIANCE - RESIDENTIAL PERFORMANCE COMPLIANCE METHOD **CF1R-PRF-01-E**

Project Name: Type C Meadow **Calculation Date/Time:** 2023-09-23T00:20:43+02:00 **(Page 3 of 14)**

Calculation Description: Title 24 Analysis **Input File Name:** Type_C_Meadow.ribd22x

ENERGY USE SUMMARY

Energy Use	Standard Design Source Energy (EDR1) (kBtu/ft^2 -yr)	Standard Design TDV Energy (EDR2) (kTDV/ft^2 -yr)	Proposed Design Source Energy (EDR1) (kBtu/ft^2 -yr)	Proposed Design TDV Energy (EDR2) (kTDV/ft^2 -yr)	Compliance Margin (EDR1)	Compliance Margin (EDR2)
Space Heating	18.71	125.86	7.55	79.36	11.16	46.5
Space Cooling	0.3	3.53	0.4	5.05	-0.1	-1.52
IAQ Ventilation	0.97	10.52	0.51	5.55	0.46	4.97
Water Heating	3.6	47.77	11.21	72.04	-7.61	-24.27
Self Utilization/Flexibility Credit				0		0
North Facing Efficiency Compliance Total	**23.58**	**187.68**	**19.67**	**162**	**3.91**	**25.68**
Space Heating	18.71	125.86	7.37	77.46	11.34	48.4
Space Cooling	0.3	3.53	0.42	5.38	-0.12	-1.85
IAQ Ventilation	0.97	10.52	0.51	5.55	0.46	4.97
Water Heating	3.6	47.77	11.21	72.04	-7.61	-24.27
Self Utilization/Flexibility Credit				0		0
East Facing Efficiency Compliance Total	**23.58**	**187.68**	**19.51**	**160.43**	**4.07**	**27.25**

Registration Number: 223-P016591465A-000-000-0000000-0000 Registration Date/Time: 2023-09-27 08:12:19 HERS Provider: CalCERTS Inc.

CA Building Energy Efficiency Standards - 2022 Residential Compliance Report Version: 2022.0.000 Schema Version: rev 20220901 Report Generated: 2023-09-22 15:21:21

CERTIFICATE OF COMPLIANCE - RESIDENTIAL PERFORMANCE COMPLIANCE METHOD **CF1R-PRF-01-E**

Project Name: Type C Meadow **Calculation Date/Time:** 2023-09-23T00:20:43+02:00 **(Page 2 of 14)**

Calculation Description: Title 24 Analysis **Input File Name:** Type_C_Meadow.ribd22x

ENERGY DESIGN RATINGS

	Energy Design Ratings			Compliance Margins		
	Source Energy (EDR1)	Efficiency[1] EDR (EDR2efficiency)	Total[2] EDR (EDR2total)	Source Energy (EDR1)	Efficiency[1] EDR (EDR2efficiency)	Total[2] EDR (EDR2total)
Standard Design	46.7	56.3	47.6			
Proposed Design						
North Facing	41	48.6	42.6	5.7	7.7	5
East Facing	40.8	48.1	42.3	5.9	8.2	5.3
South Facing	40.8	48.2	42.4	5.9	8.1	5.2
West Facing	41	48.5	42.6	5.7	7.8	5

RESULT[3]: PASS

[1]Efficiency EDR includes improvements like a better building envelope and more efficient equipment

[2]Total EDR includes efficiency and demand response measures such as photovoltaic (PV) system and batteries

[3]Building complies when source energy, efficiency and total compliance margins are greater than or equal to zero and unmet load hour limits are not exceeded

- Standard Design PV Capacity: 2.04 kWdc
- Proposed PV Capacity Scaling: North (2.04 kWdc) East (2.04 kWdc) South (2.04 kWdc) West (2.04 kWdc)

Registration Number: 223-P016591465A-000-000-0000000-0000 Registration Date/Time: 2023-09-27 08:12:19 HERS Provider: CalCERTS Inc.

CA Building Energy Efficiency Standards - 2022 Residential Compliance Report Version: 2022.0.000 Schema Version: rev 20220901 Report Generated: 2023-09-22 15:21:21

CERTIFICATE OF COMPLIANCE - RESIDENTIAL PERFORMANCE COMPLIANCE METHOD **CF1R-PRF-01-E**

Project Name: Type C Meadow **Calculation Date/Time:** 2023-09-23T00:20:43+02:00 **(Page 1 of 14)**

Calculation Description: Title 24 Analysis **Input File Name:** Type_C_Meadow.ribd22x

GENERAL INFORMATION

01	Project Name	Type C Meadow		
02	Run Title	Title 24 Analysis		
03	Project Location	_		
04	City		05	Standards Version 2022
06	Zip code		07	Software Version EnergyPro 9.0
08	Climate Zone	16	09	Front Orientation (deg/ Cardinal) All orientations
10	Building Type	Single family	11	Number of Dwelling Units 1
12	Project Scope	Newly Constructed	13	Number of Bedrooms 2
14	Addition Cond. Floor Area (ft^2)	0	15	Number of Stories 1
16	Existing Cond. Floor Area (ft^2)	n/a	17	Fenestration Average U-factor 0.28
18	Total Cond. Floor Area (ft^2)	869.56	19	Glazing Percentage (%) 18.50%
20	ADU Bedroom Count	n/a		

COMPLIANCE RESULTS

01	This building Complies with Computer Performance
02	This building incorporates features that require field testing and/or verification by a certified HERS rater under the supervision of a CEC-approved HERS provider.
03	This building incorporates one or more Special Features shown below

Registration Number: 223-P016591465A-000-000-0000000-0000 Registration Date/Time: 2023-09-27 08:12:19 HERS Provider: CalCERTS Inc.

CA Building Energy Efficiency Standards - 2022 Residential Compliance Report Version: 2022.0.000 Schema Version: rev 20220901 Report Generated: 2023-09-22 15:21:21

NOT FOR CONSTRUCTION

ZAL ENGINEERING
MECHANICAL CONSULTANTS
99 PACIFIC ST, STE 375G
MONTEREY, CA 93940
TELEPHONE(831)641-7739
JOB NO. 23020.00

PLUMAS COUNTY
PRE-DESIGNED ADU
BUELLTON, CALIFORNIA

T24 FORMS
TYPE C
MEADOW

NO.	DESCRIPTION	DATE
1	.	.
2		
3		
4		

ENGINEER BY:

DRAWN BY:

CHECKED BY:

SHEET NUMBER

T24.21

SHEET OF

THE USE OF THESE PLANS AND SPECIFICATIONS IS RESTRICTED TO THE ORIGINAL SITE FOR WHICH THEY WERE PREPARED, AND PUBLICATION THEREOF IS EXPRESSLY LIMITED TO SUCH USE. RE-USE, REPRODUCTION OR PUBLICATION BY ANY METHOD IN WHOLE OR IN PART IS PROHIBITED. TITLE TO THE PLANS AND SPECIFICATIONS REMAINS WITH THE ENGINEER AND VISUAL CONTACT WITH THEM CONSTITUDES PRIMA FACIE EVIDENCE OF THE ACCEPTANCE OF THESE RESTRICTIONS.

NOT FOR CONSTRUCTION

CERTIFICATE OF COMPLIANCE - RESIDENTIAL PERFORMANCE COMPLIANCE METHOD **CF1R-PRF-01-E**

Project Name: Type C Meadow **Calculation Date/Time:** 2023-09-23T00:20:43+02:00 **(Page 14 of 14)**

Calculation Description: Title 24 Analysis **Input File Name:** Type_C_Meadow.ribd22x

DOCUMENTATION AUTHOR'S DECLARATION STATEMENT	
1. I certify that this Certificate of Compliance documentation is accurate and complete.	
Documentation Author Name: Jaime Zaldivar	Documentation Author Signature:
Company: ZAL Engineering	Signature Date: 2023-09-27
Address: 99 Pacific St, Ste 375G	CEA/ HERS Certification Identification (If applicable): M37306
City/State/Zip: Monterey, CA 93940	Phone: 831-641-7739

RESPONSIBLE PERSON'S DECLARATION STATEMENT	
I certify the following under penalty of perjury, under the laws of the State of California:	
I am eligible under Division 3 of the Business and Professions Code to accept responsibility for the building design identified on this Certificate of Compliance.	
I certify that the energy efficiency and performance specifications identified on this Certificate of Compliance conform to the requirements of Title 24, Part 1 and Part 6 of the California Code of Regulations.	
The building design features or system design features identified on this Certificate of Compliance are consistent with the information provided on other applicable compliance documents, worksheets, calculations, plans and specifications submitted to the enforcement agency for approval with this building permit application.	
Responsible Person's Name: Jaime Zaldivar	Responsible Designer Signature:
Company: ZAL Engineering	Date Signed: 2023-09-27 08:12:19
Address: 99 Pacific St, Ste 375G	License: M37306
City/State/Zip: Monterey, CA 93940	Phone: 831-641-7739

This document is digitally signed by CalCERTS. This digital signature is provided in order to secure the content of this registered document, and in no way implies HERS Certification Provider responsibility for the accuracy of the information.

Easy to Verify at CalCERTS.com

CERTIFICATE OF COMPLIANCE - RESIDENTIAL PERFORMANCE COMPLIANCE METHOD **CF1R-PRF-01-E**

Project Name: Type C Meadow **Calculation Date/Time:** 2023-09-23T00:20:43+02:00 **(Page 13 of 14)**

Calculation Description: Title 24 Analysis **Input File Name:** Type_C_Meadow.ribd22x

HVAC HEAT PUMPS - HERS VERIFICATION

01	02	03	04	05	06	07	08	09
Name	Verified Refrigerant Charge	Airflow Target	Verified EER/EER2	Verified SEER/SEER2	Verified Refrigerant Charge	Verified HSPF/HSPF2	Verified Heating Cap 47	Verified Heating Cap 17
1-hers-htpump	Not Required	0	Not Required	Not Required	Yes	No	Yes	Yes

INDOOR AIR QUALITY (IAQ) FANS

01	02	03	04	05	06	07	08	09
Ventilation Unit	Airflow (CFM)	Fan Efficacy (W/CFM)	IAQ Fan Type	Includes Heat/Energy Recovery?	IAQ Recovery Effectiveness - SRE	Includes Fault Indicator Display?	HERS Verification	Status
SFam IAQVentRpt 1-1	80	0.25	Balanced	Yes	83	No	Yes	

CERTIFICATE OF COMPLIANCE - RESIDENTIAL PERFORMANCE COMPLIANCE METHOD **CF1R-PRF-01-E**

Project Name: Type C Meadow **Calculation Date/Time:** 2023-09-23T00:20:43+02:00 **(Page 12 of 14)**

Calculation Description: Title 24 Analysis **Input File Name:** Type_C_Meadow.ribd22x

WATER HEATING - COMPACT DISTRIBUTION

01	02	03	04	05	06	07
Dwelling Unit type	Water Heating System Name	Master Bath distance of furthest fixture to Water Heater (ft)	Kitchen distance of furthest fixture to Water Heater (ft)	Furthest Third furthest fixture to Water Heater (ft)	Compactness Factor	HERS Verification
Dwelling	DHW Sys 1	n/a	n/a	n/a	0.7	n/a

WATER HEATING - HERS VERIFICATION

01	02	03	04	05	06	07
Name	Pipe Insulation	Parallel Piping	Compact Distribution	Compact Distribution Type	Recirculation Control	Shower Drain Water Heat Recovery
DHW Sys 1 - 1/1	Not Required	Not Required	Not Required	Basic	Not Required	Not Required

SPACE CONDITIONING SYSTEMS

01	02	03	04	05	06	07	08	09
Name	System Type	Heating Unit Name	Heating Equipment Count	Cooling Unit Name	Cooling Equipment Count	Fan Name	Distribution Name	Required Thermostat Type
Undefined System1	Heat pump heating cooling	Heat Pump System 1	1	Heat Pump System 1	1	n/a	n/a	Setback

HVAC - HEAT PUMPS

01	02	03	04	05	06	07	08	09	10	11	12	13
			Heating				Cooling					
Name	System Type	Number of Units	Efficiency Type	HSPF / HSPF2 / COP	Cap 47	Cap 17	Efficiency Type	SEER / SEER2	EER / EER / CEER	Zonally Controlled	Compressor Type	HERS Verification
Heat Pump System 1	Ductless MiniSplit HP	1	HSPF2	10	30600	21000	EER2SEER2	20	13.6	Not Zonal	Single Speed	Heat Pump System 1-hers-htpump

CERTIFICATE OF COMPLIANCE - RESIDENTIAL PERFORMANCE COMPLIANCE METHOD **CF1R-PRF-01-E**

Project Name: Type C Meadow **Calculation Date/Time:** 2023-09-23T00:20:43+02:00 **(Page 11 of 14)**

Calculation Description: Title 24 Analysis **Input File Name:** Type_C_Meadow.ribd22x

BUILDING ENVELOPE - HERS VERIFICATION

01	02	03	04	05
Quality Insulation Installation (QII)	High R-value Spray Foam Insulation	Building Envelope Air Leakage	CFM50	CFM50
Not Required	Not Required	N/A	n/a	n/a

WATER HEATING SYSTEMS

01	02	03	04	05	06	07	08	09
Name	System Type	Distribution Type	Water Heater Name	Number of Units	Solar Heating System	Compact Distribution	HERS Verification	Water Heater Name (#)
DHW Sys 1	Domestic Hot Water (DHW)	Demand Recirculation Sensor Controls	DHW Heater 1	1	n/a	Basic	n/a	DHW Heater 1 (1)

WATER HEATERS

01	02	03	04	05	06	07	08	09	10	11	12	13
Name	Heating Element Type	Tank Type	# of Units	Tank Vol. (gal)	Heating Efficiency Type	Efficiency	Rated Input Type	Input Rating or Pilot	Tank Insulation R-value (Int/Ext)	Standby Loss or Recovery Eff	1st Hr. Rating or Flow Rate	Tank Location
DHW Heater 1	Propane	Consumer Instantaneous	1	0	UEF	0.93	Btu/Hr	200000	0	n/a	n/a	

RECIRCULATION LOOPS

01	02	03	04	05
Water Heating System Name	Number of Recirculation Loops	Loop Insulation Thickness (in)	Recirculation Loop Location	Recirculation Pump Power (W)
DHW Sys 1	1	1.5	Conditioned	0

CERTIFICATE OF COMPLIANCE - RESIDENTIAL PERFORMANCE COMPLIANCE METHOD **CF1R-PRF-01-E**

Project Name: Type C Meadow **Calculation Date/Time:** 2023-09-23T00:20:43+02:00 **(Page 10 of 14)**

Calculation Description: Title 24 Analysis **Input File Name:** Type_C_Meadow.ribd22x

SLAB FLOORS

01	02	03	04	05	06	07	08
Name	Zone	Area (ft^2)	Perimeter (ft)	Edge Insul. R-value and Depth	Edge Insul. R-value and Depth	Carpeted Fraction	Heated
Slab-on-Grade	Undefined Zone	350.59	54.33	none	0	80%	No
Slab-on-Grade 2	Undefined Zone	53.84	0.1	none	0	80%	No
Slab-on-Grade 3	Undefined Zone	177.68	27.58	none	0	80%	No
Slab-on-Grade 4	Undefined Zone	55.43	5.08	none	0	80%	No
Slab-on-Grade 5	Undefined Zone	60.35	5.08	none	0	80%	No
Slab-on-Grade 6	Undefined Zone	171.67	30.08	none	0	80%	No

OPAQUE SURFACE CONSTRUCTIONS

01	02	03	04	05	06	07	08
Construction Name	Surface Type	Construction Type	Framing	Total Cavity R-value	Interior / Exterior Continuous R-value	U-factor	Assembly Layers
R-21 Wall	Exterior Walls	Wood Framed Wall	2x6 @ 16 in. O. C.	R-21	5 / None	0.048	Inside Finish: Gypsum Board Sheathing / Insulation: R-5 Sheathing Cavity / Frame: R-21 / 2x6 Exterior Finish: 3 Coat Stucco
R-30 Roof No Attic	Cathedral Ceilings	Wood Framed Ceiling	2x12 @ 16 in. O. C.	R-30	None / None	0.036	Roofing: Light Roof (Asphalt Shingle) Roof Deck: Wood Siding/sheathing/decking Cavity / Frame: R-30 / 2x12 Inside Finish: Gypsum Board

ZAL ENGINEERING

ZAL ENGINEERING
MECHANICAL CONSULTANTS
99 PACIFIC ST, STE 375G
MONTEREY, CA 93940
TELEPHONE (831) 641-7739
JOB NO. 23020.00

PLUMAS COUNTY
PRE-DESIGNED ADU
BUELLTON, CALIFORNIA

T24 FORMS
TYPE C
MEADOW

NO.	DESCRIPTION	DATE
1		
2		
3		
4		

ENGINEER BY:

DRAWN BY:

CHECKED BY:

SHEET NUMBER

T24.22

SHEET OF

THE USE OF THESE PLANS AND SPECIFICATIONS IS RESTRICTED TO THE ORIGINAL SITE FOR WHICH THEY WERE PREPARED, AND PUBLICATION THEREOF IS EXPRESSLY LIMITED TO SUCH USE. RE-USE, REPRODUCTION OR PUBLICATION BY ANY METHOD IN WHOLE OR IN PART IS PROHIBITED. TITLE TO THE PLANS AND SPECIFICATIONS REMAINS WITH THE ENGINEER AND VISUAL CONTACT WITH THEM CONSTITUDES PRIMA FACIE EVIDENCE OF THE ACCEPTANCE OF THESE RESTRICTIONS.

CERTIFICATE OF COMPLIANCE - RESIDENTIAL PERFORMANCE COMPLIANCE METHOD — CF1R-PRF-01-E

Project Name: Type C Goldrush — **Calculation Date/Time:** 2023-09-23T00:10:30+02:00 — (Page 9 of 14)

Calculation Description: Title 24 Analysis — **Input File Name:** Type_C_Goldrush.ribd22x

FENESTRATION / GLAZING

01	02	03	04	05	06	07	08	09	10	11	12	13	14
Name	Type	Surface	Orientation	Azimuth	Width (ft)	Height (ft)	Mult.	Area (ft^2)	U-factor	U-factor Source	SHGC	SHGC Source	Exterior Shading
Window 8	Window	Lateral 1 Wall 2	Left	90			1	10	0.28	NFRC	0.35	NFRC	Bug Screen
Window 9	Window	Lateral 1 Wall 2	Left	90			1	10	0.28	NFRC	0.35	NFRC	Bug Screen
Window 10	Window	Rear Wall	Back	180			1	10	0.28	NFRC	0.35	NFRC	Bug Screen
Window 11	Window	Rear Wall 2	Back	180			1	6	0.28	NFRC	0.35	NFRC	Bug Screen
Window 12	Window	Rear Wall 3	Back	180			1	6	0.28	NFRC	0.35	NFRC	Bug Screen
Window 13	Window	Rear Wall 4	Back	180			1	10	0.28	NFRC	0.35	NFRC	Bug Screen
Window 14	Window	Lateral 2 Wall 2	Right	270			1	10	0.28	NFRC	0.35	NFRC	Bug Screen
Window 15	Window	Lateral 2 Wall 2	Right	270			1	10	0.28	NFRC	0.35	NFRC	Bug Screen
Window 16	Window	Lateral 2 Wall 2	Right	270			1	10	0.28	NFRC	0.35	NFRC	Bug Screen

OPAQUE DOORS

01	02	03	04
Name	Side of Building	Area (ft^2)	U-factor
Door	Lateral 1 Wall	20.25	0.5

OVERHANGS AND FINS

01	02	03	04	05	06	07	08	09	10	11	12	13	14
Window	Overhang					Left Fin				Right Fin			
	Depth	Dist Up	Left Extent	Right Extent	Flap Ht.	Depth	Top Up	Dist L	Bot Up	Depth	Top Up	Dist R	Bot Up
Window 4	0	0	0	0	0	7.67	0	9.92	0	0	0	0	0

CERTIFICATE OF COMPLIANCE - RESIDENTIAL PERFORMANCE COMPLIANCE METHOD — CF1R-PRF-01-E

Project Name: Type C Goldrush — **Calculation Date/Time:** 2023-09-23T00:10:30+02:00 — (Page 8 of 14)

Calculation Description: Title 24 Analysis — **Input File Name:** Type_C_Goldrush.ribd22x

OPAQUE SURFACES - CATHEDRAL CEILINGS

01	02	03	04	05	06	07	08	09	10	11
Name	Zone	Construction	Azimuth	Orientation	Area (ft^2)	Skylight Area (ft^2)	Roof Rise (x in 12)	Roof Reflectance	Roof Emittance	Cool Roof
Roof Rear	Undefined Zone	R-30 Roof No Attic	180	Back	40.06	0	8	0.1	0.85	No
Roof Rear 2	Undefined Zone	R-30 Roof No Attic	180	Back	177.68	0	8	0.1	0.85	No
Roof Rear 3	Undefined Zone	R-30 Roof No Attic	180	Back	55.43	0	8	0.1	0.85	No
Roof Rear 4	Undefined Zone	R-30 Roof No Attic	180	Back	60.35	0	8	0.1	0.85	No
Roof Rear 5	Undefined Zone	R-30 Roof No Attic	180	Back	144.92	0	8	0.1	0.85	No
Roof Front 3	Undefined Zone	R-30 Roof No Attic	0	Front	26.75	0	8	0.1	0.85	No

FENESTRATION / GLAZING

01	02	03	04	05	06	07	08	09	10	11	12	13	14
Name	Type	Surface	Orientation	Azimuth	Width (ft)	Height (ft)	Mult.	Area (ft^2)	U-factor	U-factor Source	SHGC	SHGC Source	Exterior Shading
Window	Window	Front Wall	Front	0			1	10	0.28	NFRC	0.35	NFRC	Bug Screen
Window 2	Window	Front Wall	Front	0			1	10	0.28	NFRC	0.35	NFRC	Bug Screen
Window 3	Window	Front Wall	Front	0			1	10	0.28	NFRC	0.35	NFRC	Bug Screen
Window 4	Window	Lateral 1 Wall	Left	90	2.5	4	1	10	0.28	NFRC	0.35	NFRC	Bug Screen
Window 5	Window	Lateral 1 Wall	Left	90	2.5	4	1	10	0.28	NFRC	0.35	NFRC	Bug Screen
Window 6	Window	Lateral 2 Wall	Right	270			1	6.25	0.28	NFRC	0.35	NFRC	Bug Screen
Window 7	Window	Lateral 2 Wall	Right	270			1	10	0.28	NFRC	0.35	NFRC	Bug Screen

CERTIFICATE OF COMPLIANCE - RESIDENTIAL PERFORMANCE COMPLIANCE METHOD — CF1R-PRF-01-E

Project Name: Type C Goldrush — **Calculation Date/Time:** 2023-09-23T00:10:30+02:00 — (Page 7 of 14)

Calculation Description: Title 24 Analysis — **Input File Name:** Type_C_Goldrush.ribd22x

ZONE INFORMATION

01	02	03	04	05	06	07
Zone Name	Zone Type	HVAC System Name	Zone Floor Area (ft^2)	Avg. Ceiling Height	Water Heating System 1	Status
Undefined Zone	Conditioned	Undefined System1	869.56	8	DHW Sys 1	New

OPAQUE SURFACES

01	02	03	04	05	06	07	08
Name	Zone	Construction	Azimuth	Orientation	Gross Area (ft^2)	Window and Door Area (ft2)	Tilt (deg)
Front Wall	Undefined Zone	R-21 Wall	0	Front	208.5	30	90
Lateral 1 Wall	Undefined Zone	R-21 Wall	90	Left	187.68	40.25	90
Lateral 2 Wall	Undefined Zone	R-21 Wall	270	Right	187.13	16.25	90
Front Wall 2	Undefined Zone	R-21 Wall	0	Front	33.22	0	90
Lateral 1 Wall 2	Undefined Zone	R-21 Wall	90	Left	178.69	20	90
Rear Wall	Undefined Zone	R-21 Wall	180	Back	97.33	10	90
Rear Wall 2	Undefined Zone	R-21 Wall	180	Back	40.67	6	90
Rear Wall 3	Undefined Zone	R-21 Wall	180	Back	40.67	6	90
Rear Wall 4	Undefined Zone	R-21 Wall	180	Back	97.33	10	90
Lateral 2 Wall 2	Undefined Zone	R-21 Wall	270	Right	146.05	30	90
Front Wall 3	Undefined Zone	R-21 Wall	0	Front	30.67	0	90

OPAQUE SURFACES - CATHEDRAL CEILINGS

01	02	03	04	05	06	07	08	09	10	11
Name	Zone	Construction	Azimuth	Orientation	Area (ft^2)	Skylight Area (ft^2)	Roof Rise (x in 12)	Roof Reflectance	Roof Emittance	Cool Roof
Roof Front	Undefined Zone	R-30 Roof No Attic	0	Front	350.59	0	8	0.1	0.85	No
Roof Front 2	Undefined Zone	R-30 Roof No Attic	0	Front	13.78	0	8	0.1	0.85	No

CERTIFICATE OF COMPLIANCE - RESIDENTIAL PERFORMANCE COMPLIANCE METHOD — CF1R-PRF-01-E

Project Name: Type C Goldrush — **Calculation Date/Time:** 2023-09-23T00:10:30+02:00 — (Page 6 of 14)

Calculation Description: Title 24 Analysis — **Input File Name:** Type_C_Goldrush.ribd22x

REQUIRED PV SYSTEMS

01	02	03	04	05	06	07	08	09	10	11	12
DC System Size (kWdc)	Exception	Module Type	Array Type	Power Electronics	CFI	Azimuth (deg)	Tilt Input	Array Angle (deg)	Tilt: (x in 12)	Inverter Eff. (%)	Annual Solar Access (%)
2.04	NA	Standard (14-17%)	Fixed	none	true	150-270	n/a	n/a	<=7:12	96	98

REQUIRED SPECIAL FEATURES

The following are features that must be installed as condition for meeting the modeled energy performance for this computer analysis.

- Indoor air quality, balanced fan
- IAQ Ventilation System: as low as 0.25 W/CFM
- IAQ Ventilation System Heat Recovery: minimum 80 SRE and 83 ASRE
- IAQ Ventilation System: supply outside air inlet, filter, and H/ERV cores accessible per RACM Reference Manual
- IAQ Ventilation System: fault indicator display
- Window overhangs and/or fins
- Compact distribution system basic credit
- Recirculating with demand control, occupancy/motion sensor

HERS FEATURE SUMMARY

The following is a summary of the features that must be field-verified by a certified HERS Rater as a condition for meeting the modeled energy performance for this computer analysis. Additional detail is provided in the building tables below. Registered CF2Rs and CF3Rs are required to be completed in the HERS Registry

- Indoor air quality ventilation
- Kitchen range hood
- Verified Refrigerant Charge
- Verified heat pump rated heating capacity

BUILDING - FEATURES INFORMATION

01	02	03	04	05	06	07
Project Name	Conditioned Floor Area (ft^2)	Number of Dwelling Units	Number of Bedrooms	Number of Zones	Number of Ventilation Cooling Systems	Number of Water Heating Systems
Type C Goldrush	869.56	1	2	1	0	1

NOT FOR CONSTRUCTION

CERTIFICATE OF COMPLIANCE - RESIDENTIAL PERFORMANCE COMPLIANCE METHOD — CF1R-PRF-01-E

Project Name: Type C Goldrush — **Calculation Date/Time:** 2023-09-23T00:[illegible]02:00 — (Page 5 of 14)

Calculation Description: Title 24 Analysis — **Input File Nam**[illegible].ribd22[illegible]

ENERGY USE INTENSITY

	Standard Design ($kBtu/ft^2$ - yr)	[illegible]sign (kBtu/ft[illegible]	Compliance Ma[illegible]Btu/ft[illegible]	Margi[illegible]ercentage
North Facing				
Gross EUI[1]	[illegible]	[illegible]	[illegible]	14.14
Net EUI[2]	27.44	21.72	5.72	20.85
East Facin[illegible]				
Gross EUI[1]	[illegible].46	34.62	5.84	14[illegible]
Net EUI[2]	[illegible]4	21.6	5.84	21.2[illegible]
Sou[illegible]ing				
[illegible]oss EUI[1]	40.46	34.86	[illegible]	13.84
[illegible]	27.44	21.84	5[illegible]	20.41
[illegible]t Facing				
Gross EUI[1]	[illegible]	[illegible].66	5.8	14.34
Net EUI[2]	27.44	21.64	5.8	21.14

Notes
1. Gross E[illegible] (not including [illegible]tal Building Area
2. Net [illegible]ergy Use Total (including PV) / To[illegible]ding Area.

CERTIFICATE OF COMPLIANCE - RESIDENTIAL PERFORMANCE COMPLIANCE METHOD — CF1R-PRF-01-E

Project Name: Type C Goldrush — **Calculation Date/Time:** 2023-09-23T00:10:30+02:00 — (Page 4 of 14)

Calculation Description: Title 24 Analysis — **Input File Name:** Type_C_Goldrush.ribd22x

ENERGY USE SUMMARY

Energy Use	Standard Design So[illegible]DR1) (kBtu/f[illegible]	Standard Design TDV Energy (EDR2) (kTDV/ft^2 -yr)	Proposed Design Source Energy (EDR1) (kBtu/ft^2 -yr)	Proposed Design TDV Energy (EDR2) (kTDV/ft^2 -yr)	Compliance Margin (EDR1)	Compliance Margin (EDR2)
Sp[illegible]ting	[illegible]	130.11	7.59	79.82	11.76	50.29
[illegible]pace Co[illegible]	0.2[illegible]	3.29	0.42	5.06	-0.14	-1.77
IAQ Ventilatio[illegible]	0.97	10.52	0.51	5.55	0.46	4.97
Water Heating	[illegible].6	47.76	11.21	72.04	-7.61	-24.28
Self [illegible]lization/Flexi[illegible]				0		0
South Facing Efficiency Compliance Total	**24.2**	**191.68**	**19.73**	**162.47**	**4.47**	**29.21**
Space Heating	19.35	130.11	7.49	78.93	11.86	51.18
Space Cooling	0.28	3.29	0.34	4.19	-0.06	-0.9
IAQ Ventilation	0.97	10.52	0.51	5.55	0.46	4.97
Water Heating	3.6	47.76	11.21	72.04	-7.61	-24.28
Self Utilization/Flexibility Credit				0		0
West Facing Efficiency Compliance Total	**24.2**	**191.68**	**19.55**	**160.71**	**4.65**	**30.97**

CERTIFICATE OF COMPLIANCE - RESIDENTIAL PERFORMANCE COMPLIANCE METHOD — CF1R-PRF-01-E

Project Name: Type C Goldrush — **Calculation Date/Time:** 2023-[illegible]2:00 — (Page 3 of 14)

Calculation Description: Title 24 Analysis — **Input File Name:** Type_C_Goldrush.ribd22x

ENERGY USE SUMMARY

Energy Use	Standard Design Source Energy (EDR1) (kBtu/ft^2 -yr)	Standard Design TDV Energy (EDR2) (kTDV/ft^2 -yr)	Proposed Design Source Energy (EDR1) (kBtu/ft^2 -yr)	Proposed Design TDV Energy (EDR2) (kTDV/ft^2 -yr)	Compliance Margin (EDR1)	Compliance Margin (EDR2)
Space Heating	19.35	130.11	7.47	78.47	11.88	51.64
Space Cooling	0.28	3.29	0.43	5.22	-0.15	-1.93
IAQ Ventilation	0.97	10.52	0.51	5.55	0.46	4.97
Water Heating	3.6	47.76	11.21	72.04	-7.61	-24.28
Self Utilization/Flexibility Credit				0		0
North Facing Efficiency Compliance Total	**24.2**	**191.68**	**19.62**	**161.28**	**4.58**	**30.4**
Space Heating	19.35	130.11	7.42	78.19	11.93	51.92
Space Cooling	0.28	3.29	0.37	4.4	-0.09	-1.11
IAQ Ventilation	0.97	10.52	0.51	5.55	0.46	4.97
Water Heating	3.6	47.76	11.21	72.04	-7.61	-24.28
Self Utilization/Flexibility Credit				0		0
East Facing Efficiency Compliance Total	**24.2**	**191.68**	**19.51**	**160.18**	**4.69**	**31.5**

CERTIFICATE OF COMPLIANCE - RESIDENTIAL PERFORMANCE COMPLIANCE METHOD — CF1R-PRF-01-E

Project Name: Type C Goldrush — **Calculation Date/Time:** 2023-09-23T00:10:30+02:00 — (Page 2 of 14)

Calculation Description: Title 24 Analysis — **Input File Name:** Type_C_Goldrush.ribd22x

ENERGY DESIGN RATINGS

	Energy Design Ratings			Compliance Margins		
	Source Energy (EDR1)	Efficiency[1] EDR (EDR2efficiency)	Total[2] EDR (EDR2total)	Source Energy (EDR1)	Efficiency[1] EDR (EDR2efficiency)	Total[2] EDR (EDR2total)
Standard Design	46.9	56.2	47.7			
Proposed Design						
North Facing	40.3	47.3	41.9	6.6	8.9	5.8
East Facing	40.1	47	41.7	6.8	9.2	6
South Facing	40.4	47.6	42.1	6.5	8.6	5.6
West Facing	40.2	47.1	41.8	6.7	9.1	5.9

RESULT[3]: PASS

[1]Efficiency EDR includes improvements like a better building envelope and more efficient equipment
[2]Total EDR includes efficiency and demand response measures such as photovoltaic (PV) system and batteries
[3]Building complies when source energy, efficiency and total compliance margins are greater than or equal to zero and unmet load hour limits are not exceeded

- Standard Design PV Capacity: 2.04 kWdc
- Proposed PV Capacity Scaling: North (2.04 kWdc) East (2.04 kWdc) South (2.04 kWdc) West (2.04 kWdc)

CERTIFICATE OF COMPLIANCE - RESIDENTIAL PERFORMANCE COMPLIANCE METHOD — CF1R-PRF-01-E

Project Name: Type C Goldrush — **Calculation Date/Time:** 2023-09-23T00:10:30+02:00 — (Page 1 of 14)

Calculation Description: Title 24 Analysis — **Input File Name:** Type_C_Goldrush.ribd22x

GENERAL INFORMATION

01	Project Name	Type C Goldrush			
02	Run Title	Title 24 Analysis			
03	Project Location	_			
04	City		05	Standards Version	2022
06	Zip code		07	Software Version	EnergyPro 9.0
08	Climate Zone	16	09	Front Orientation (deg/ Cardinal)	All orientations
10	Building Type	Single family	11	Number of Dwelling Units	1
12	Project Scope	Newly Constructed	13	Number of Bedrooms	2
14	Addition Cond. Floor Area (ft^2)	0	15	Number of Stories	1
16	Existing Cond. Floor Area (ft^2)	n/a	17	Fenestration Average U-factor	0.28
18	Total Cond. Floor Area (ft^2)	869.56	19	Glazing Percentage (%)	17.00%
20	ADU Bedroom Count	n/a			

COMPLIANCE RESULTS

01	**Building Complies with Computer Performance**
02	**This building incorporates features that require field testing and/or verification by a certified HERS rater under the supervision of a CEC-approved HERS provider.**
03	**This building incorporates one or more Special Features shown below**

ZAL ENGINEERING
ZAL Engineering
Mechanical Consultants
99 Pacific St, Ste 375G
Monterey, CA 93940
Telephone (831) 641-7739
Job No. 23020.00

PLUMAS COUNTY PRE-DESIGNED ADU
BUELLTON, CALIFORNIA

T24 FORMS TYPE C GOLDRUSH

NO.	DESCRIPTION	DATE
1	.	.
2		
3		
4		

ENGINEER BY:

DRAWN BY:

CHECKED BY:

SHEET NUMBER

T24.23

SHEET OF

THE USE OF THESE PLANS AND SPECIFICATIONS IS RESTRICTED TO THE ORIGINAL SITE FOR WHICH THEY WERE PREPARED, AND PUBLICATION THEREOF IS EXPRESSLY LIMITED TO SUCH USE. RE-USE, REPRODUCTION OR PUBLICATION BY ANY METHOD IN WHOLE OR IN PART IS PROHIBITED. TITLE TO THE PLANS AND SPECIFICATIONS REMAINS WITH THE ENGINEER AND VISUAL CONTACT WITH THEM CONSTITUTES PRIMA FACIE EVIDENCE OF THE ACCEPTANCE OF THESE RESTRICTIONS.

NOT FOR CONSTRUCTION

CERTIFICATE OF COMPLIANCE - RESIDENTIAL PERFORMANCE COMPLIANCE METHOD **CF1R-PRF-01-E**

Project Name: Type C Goldrush **Calculation Date/Time:** 2023-09-23T00:10:30+02:00 **(Page 14 of 14)**

Calculation Description: Title 24 Analysis **Input File Name:** Type_C_Goldrush.ribd22x

DOCUMENTATION AUTHOR'S DECLARATION STATEMENT

1. I certify that this Certificate of Compliance documentation is accurate and complete.

Documentation Author Name: Jaime Zaldivar	Documentation Author Signature:
Company: ZAL Engineering	Signature Date/Time: 2023-09-27
Address: 99 Pacific St, Ste 375G	CEA/ HERS Certification Identification (if applicable): M37306
City/State/Zip: Monterey, CA 93940	Phone: 831-641-7739

RESPONSIBLE PERSON'S DECLARATION STATEMENT

I certify the following under penalty of perjury, under the laws of the State of California:

I am eligible under Division 3 of the Business and Professions Code to accept responsibility for the building design identified on this Certificate of Compliance.

I certify that the energy efficiency and performance specifications identified on this Certificate of Compliance conform to the requirements of Title 24, Part 1 and Part 6 of the California Code of Regulations.

The building design features or system design features identified on this Certificate of Compliance are consistent with the information provided on other applicable compliance documents, worksheets, calculations, plans and specifications submitted to the enforcement agency for approval with this building permit application.

Responsible Person's Name: Jaime Zaldivar	Responsible Designer Signature:
Company: ZAL Engineering	Date/Time: 2023-09-27 08:11:01
Address: 99 Pacific St, Ste 375G	License: M37306
City/State/Zip: Monterey, CA 93940	Phone: 831-641-7739

This document is signed by CalCERTS. This electronic signature is provided in order to secure the content of this registered document, and in no way implies Certification Provider responsibility for the accuracy of the information.

Easy to Verify at CalCERTS.com

CERTIFICATE OF COMPLIANCE - RESIDENTIAL PERFORMANCE COMPLIANCE METHOD **CF1R-PRF-01-E**

Project Name: Type C Goldrush **Calculation Date/Time:** 2023-09-23T00:10:30+02:00 **(Page 13 of 14)**

Calculation Description: Title 24 Analysis **Input File Name:** Type_C_Goldrush.ribd22x

SPACE CONDITIONING SYSTEMS

01	02	03	04	05	06	07	08	09
Name	System Type	Heating Fuel	Heating Equipment Count	Cooling Unit Name	Cooling Equipment Count	Fan Name	Distribution Name	Required Thermostat Type
Undefined System1	Heating	[illegible]	1	Heat Pump System 1	1	n/a	n/a	Setback

HVAC - HEAT PUMPS

01	02	03	04	05	06	07	08	09	10	11	12	13
			Heating				Cooling					
System Type		Number of Units	Efficiency Type	HSPF / HSPF2 / COP	Cap 47	Cap 17	Efficiency Type	SEER / SEER2	EER / EER / CEER	Zonally Controlled	Compressor Type	HERS Verification
Heat Pump System 1	Ductless MiniSplit HP	1	HSPF2	10	30600	21000	EER25EER2	20	13.6	Not Zonal	Single Speed	Heat Pump System 1-hers-htpump

HVAC HEAT PUMPS - HERS VERIFICATION

01	02	03	04	05	06	07	08	09
Name	Verified Airflow	Airflow Target	Verified EER/EER2	Verified SEER/SEER2	Verified Refrigerant Charge	Verified HSPF/HSPF2	Verified Heating Cap 47	Verified Heating Cap 17
Heat Pump System 1-hers-htpump	Not Required	0	Not Required	Not Required	Yes	No	Yes	Yes

INDOOR AIR QUALITY (IAQ) FANS

01	02	03	04	05	06	07	08	09
Dwelling Unit	Airflow (CFM)	Fan Efficacy (W/CFM)	IAQ Fan Type	Includes Heat/Energy Recovery?	IAQ Recovery Effectiveness - SRE	Includes Fault Indicator Display?	HERS Verification	Status
SFam IAQVentRpt 1-1	80	0.25	Balanced	Yes	83	No	Yes	

CERTIFICATE OF COMPLIANCE - RESIDENTIAL PERFORMANCE COMPLIANCE METHOD **CF1R-PRF-01-E**

Project Name: Type C Goldrush **Calculation Date/Time:** 2023-09-23T00:10:30+02:00 **(Page 12 of 14)**

Calculation Description: Title 24 Analysis **Input File Name:** Type_C_Goldrush.ribd22x

WATER HEATERS

01	02	03	04	05	06	07	08	09	10	11	12	13
Name	Heating Element Type	Tank Type	# of Units	Tank Vol. (gal)	Heating Efficiency Type	Efficiency	Rated Input Type	Input Rating or Pilot	Tank Insulation R-value (int/Ext)	Standby Loss or Recovery Eff	1st Hr. Rating or Flow Rate	Tank Location
DHW Heater 1	Propane	Consumer Instantaneous	1	0	UEF	0.93	Btu/Hr	200000	0	n/a	n/a	

RECIRCULATION LOOPS

01	02	03	04	05
Water Heating System Name	Number of Recirculation Loops	Loop Insulation Thickness (in)	Recirculation Loop Location	Recirculation Pump Power (W)
DHW Sys 1	1	1.5	Conditioned	0

WATER HEATING - COMPACT DISTRIBUTION

01	02	03	04	05	06	07
Dwelling Unit type	Water Heating System Name	Master Bath distance of furthest fixture to Water Heater (ft)	Kitchen distance of furthest fixture to Water Heater (ft)	Furthest Third furthest fixture to Water Heater (ft)	Compactness Factor	HERS Verification
Dwelling	DHW Sys 1	n/a	n/a	n/a	0.7	n/a

WATER HEATING - HERS VERIFICATION

01	02	03	04	05	06	07
Name	Pipe Insulation	Parallel Piping	Compact Distribution	Compact Distribution Type	Recirculation Control	Shower Drain Water Heat Recovery
DHW Sys 1 - 1/1	Not Required	Not Required	Not Required	Basic	Not Required	Not Required

CERTIFICATE OF COMPLIANCE - RESIDENTIAL PERFORMANCE COMPLIANCE METHOD **CF1R-PRF-01-E**

Project Name: Type C Goldrush **Calculation Date/Time:** 2023-09-23T00:10:30+02:00 **(Page 11 of 14)**

Calculation Description: Title 24 Analysis **Input File Name:** Type_C_Goldrush.ribd22x

OPAQUE SURFACE CONSTRUCTIONS

01	02	03	04	05	06	07	08
Construction Name	Surface Type	Construction Type	Framing	Total Cavity R-value	Interior / Exterior Continuous R-value	U-factor	Assembly Layers
R-30 Roof No Attic	Cathedral Ceilings	Wood Framed Ceiling	2x12 @ 16 in. O. C.	R-30	None / None	0.033	Roofing: Light Roof (Asphalt Shingle) Roof Deck: Wood Siding/sheathing/decking Radiant Barrier Cavity / Frame: R-30 / 2x12 Inside Finish: Gypsum Board

BUILDING ENVELOPE - HERS VERIFICATION

01	02	03	04	05
Quality Insulation Installation (QII)	High R-value Spray Foam Insulation	Building Envelope Air Leakage	CFM50	CFM50
Not Required	Not Required	N/A	n/a	n/a

WATER HEATING SYSTEMS

01	02	03	04	05	06	07	08	09
Name	System Type	Distribution Type	Water Heater Name	Number of Units	Solar Heating System	Compact Distribution	HERS Verification	Water Heater Name (#)
DHW Sys 1	Domestic Hot Water (DHW)	Demand Recirculation Sensor Controls	DHW Heater 1	1	n/a	Basic	n/a	DHW Heater 1 (1)

CERTIFICATE OF COMPLIANCE - RESIDENTIAL PERFORMANCE COMPLIANCE METHOD **CF1R-PRF-01-E**

Project Name: Type C Goldrush **Calculation Date/Time:** 2023-09-23T00:10:30+02:00 **(Page 10 of 14)**

Calculation Description: Title 24 Analysis **Input File Name:** Type_C_Goldrush.ribd22x

OVERHANGS AND FINS

01	02	03	04	05	06	07	08	09	10	11	12	13	14
Window	Overhang					Left Fin				Right Fin			
	Depth	Dist Up	Left Extent	Right Extent	Flap Ht.	Depth	Top Up	Dist L	Bot Up	Depth	Top Up	Dist R	Bot Up
Window 5	0	0	0	0	0	7.67	0	4.58	0	0	0	0	0

SLAB FLOORS

01	02	03	04	05	06	07	08
Name	Zone	Area (ft^2)	Perimeter (ft)	Edge Insul. R-value and Depth	Edge Insul. R-value and Depth	Carpeted Fraction	Heated
Slab-on-Grade	Undefined Zone	350.59	54.33	none	0	80%	No
Slab-on-Grade 2	Undefined Zone	53.84	0.1	none	0	80%	No
Slab-on-Grade 3	Undefined Zone	177.68	27.58	none	0	80%	No
Slab-on-Grade 4	Undefined Zone	55.43	5.08	none	0	80%	No
Slab-on-Grade 5	Undefined Zone	60.35	5.08	none	0	80%	No
Slab-on-Grade 6	Undefined Zone	171.67	30.08	none	0	80%	No

OPAQUE SURFACE CONSTRUCTIONS

01	02	03	04	05	06	07	08
Construction Name	Surface Type	Construction Type	Framing	Total Cavity R-value	Interior / Exterior Continuous R-value	U-factor	Assembly Layers
R-21 Wall	Exterior Walls	Wood Framed Wall	2x6 @ 16 in. O. C.	R-21	5 / None	0.048	Inside Finish: Gypsum Board Sheathing / Insulation: R-5 Sheathing Cavity / Frame: R-21 / 2x6 Exterior Finish: 3 Coat Stucco

ZAL ENGINEERING

ZAL ENGINEERING
MECHANICAL CONSULTANTS
99 PACIFIC ST, STE 375G
MONTEREY, CA 93940
TELEPHONE (831) 641-7739
JOB NO. 23020.00

PLUMAS COUNTY
PRE-DESIGNED ADU
BUELLTON, CALIFORNIA

T24 FORMS
TYPE C
GOLDRUSH

NO.	DESCRIPTION	DATE
1	.	.
2		
3		
4		

ENGINEER BY:

DRAWN BY:

CHECKED BY:

SHEET NUMBER

T24.24

SHEET OF

THE USE OF THESE PLANS AND SPECIFICATIONS IS RESTRICTED TO THE ORIGINAL SITE FOR WHICH THEY WERE PREPARED, AND PUBLICATION THEREOF IS EXPRESSLY LIMITED TO SUCH USE. RE-USE, REPRODUCTION OR PUBLICATION BY ANY METHOD IN WHOLE OR IN PART IS PROHIBITED. TITLE TO THE PLANS AND SPECIFICATIONS REMAINS WITH THE ENGINEER AND VISUAL CONTACT WITH THEM CONSTITUDES PRIMA FACIE EVIDENCE OF THE ACCEPTANCE OF THESE RESTRICTIONS.